LOT 84
BARNWELL MANOR PHASE 1
PBK 8/293

KOTOPKA RYAN & KATHERINE
93337 SANDOWN DR
FERNANDINA BEACH, FL 32034

2023

39-2N-28-0141-0084-0000

NASSAU COUNTY PROPERTY

BUILDING CHARACTERISTICS

ELEMENT	CD	CONSTRUCTION
Exterior Wall	31	HARDIE BRD 100
Roof Structur	08	IRREGULAR 100
Roof Cover	03	COMP SHNGL 100
Interior Wall	05	DRYWALL 100
Interior Floo	12	HARDWOOD 50
Interior Floo	14	CARPET 50
Air Condition	03	CENTRAL 100
Heating Type	04	AIR DUCTED 100
Bedrooms		4 100
Bathrooms		4 100
Frame	02	WOOD FRAME 100
Stories	2.	2. 100
Units		0 100
Occupancy	00	NONE 100
Quality	02	Quality Level 02
DOR CODE	0100	SINGLE FAMILY
MAP NUM		MKT AREA 04
NEIGHBORHOOD/LOC	4088.00	

AREA TYPE	TOTAL GROSS AREA	PCT OF BASE	TOT ADJ AREA	SUBAREA MARKET VALUE
BAS	2,288	100	2,288	262,351
FGR	380	55	209	23,965
FOP	164	30	49	5,619
FOP	288	30	86	9,861
FUS	1,093	100	1,093	125,327
STR	80	10	8	917
TOTALS	4,293		3,733	428,040

MARKET ADJUSTMENTS

TYPE	MDL	EFF. AREA	TOT ADJ PTS	EFF. BASE RATE	REPL. COST NEW	AYB	EYB	ECON	FNCT		NORM	% COND
0900	01	3,733	97.0425	115.24	430,191	2020	2020	0	0	0	0.50	99.50

1 SNGL FAM – 100% - 2021 Heated Area: 3381 HX Base Yr 2021

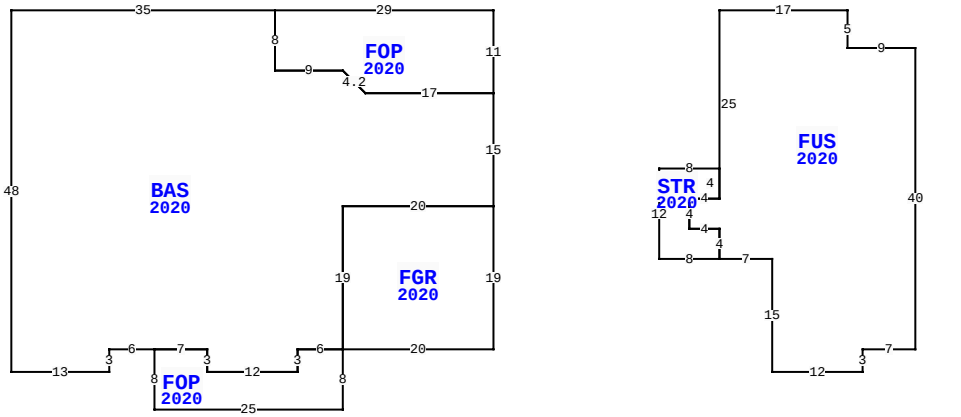

93337 SANDOWN DR, FERNANDINA BEACH

BLD DATE		LGL DATE	
XF DATE		LAND DATE	06/05/2023 MLU
INC DATE		AG DATE	

NASSAU COUNTY PROPERTY — VALUATION SUMMARY

VALUATION BY		STANDARD
Tax Group: 4	Tax Dist:	
BUILDING MARKET VALUE		428,040
TOTAL MARKET OB/XF VALUE		17,284
TOTAL LAND VALUE - MARKET		75,000
TOTAL MARKET VALUE		520,324
SOH/AGL Deduction		124,939
ASSESSED VALUE		395,385
TOTAL EXEMPTION VALUE	HX HB	50,000
BASE TAXABLE VALUE		345,385
TOTAL JUST VALUE		520,324
NCON VALUE		0
INCOME VALUE		
PREVIOUS YEAR MKT VALUE		434,994

PERMIT NUM	DESCRIPTION	AMT	ISSUED
C1906645	CO ISSUED	0	02/25/2020
B1906645	NEW CONSTR	445,989	08/01/2019

SALES DATA

OFF RECORD Number	DATE	TYPE INST	Q U	V I	RSN CD	SALE PRICE
2342/0491	2/26/2020	SW	Q	I	01	420,000

GRANTOR: AVH NORTH FLORIDA LLC
GRANTEE: KOTOPKA RYAN & KATH

BUILDING NOTES

BUILDING DIMENSIONS

FOP=[YR=2020] W29 BAS=[YR=2020] W35 S48 E13 N3 E6
FOP=[YR=2020] S8 E25 N8 W6 S3 W12 N3 W7$ E7 S3 E12 N3 E6
FGR=[YR=2020] E20 N19 W20 S19$ N19 E20 N15 W17 U3 L3 W9
N8$ S8 E9 D3 R3 E17 N11$ PTR= E30 FUS=[YR=2020] E17 S5 E9
S40 W7 S3 W12 N15 W7 STR=[YR=2020] W8 N12 E8 S4 W4 S4 E4 S4$
N4 W4 N4 E4 N25$ W30$.

EXTRA FEATURES

L N	OB/XF CODE	DESCRIPTION	BLD	CAP	L	W	UNITS	UT	Adj R	ADJ UNIT PRICE	ORIG COND	YEAR ON	YEAR ACTUAL	Q	% COND	OB/XF MKT VALUE	NOTES
1	0855	CONC PAVER	0	100	26	3	78.00	SF	10.00	10.00	100	2020	2020	3	99	772	
2	0855	CONC PAVER	0	100	0	0	956.00	SF	10.00	10.00	100	2020	2020	3	99	9,464	
3	0476	VF 6 SBPL	0	100	0	0	206.00	LF	32.00	32.00	100	2020	2020	3	98	6,460	
4	0470	VNYL GATE	0	100	0	0	2.00	UT	300.00	300.00	100	2020	2020	3	98	588	

LAND DESCRIPTION

TOTAL OB/XF 17,284

L N	USE CODE	CLS	LAND USE DESCRIPTION	CAP	R D	LOC ZONE	FRONT	DEPTH	TOT LND UTS	UNIT TYPE	D T	DPTH FACT	% COND	TOT ADJ	UNIT PRICE	ADJ UNIT PRICE	LAND VALUE	OTHER ADJUSTMENTS AND NOTES	YEAR	DENSITY	DECL	FRZ	YR	CONSRV
1	000100	C	SFR	100			0.00	0.00	1.00	LT		1.00	1.00	1.00	75,000.00	75,000.00	75,000							

REVIEW DATE 02/24/2021 BY KW Total Acres: 0.00 Total Land Value: 75,000 Market: 0 Agricultural: 0 Common: 75,000 PRINTED 08/02/2023 BY SYS