LOT 82
BARNWELL MANOR PHASE 1
PBK 8/293

GOTH DOUGLAS LAWRENCE & PATRICIA KAY
93305 SANDOWN DRIVE
FERNANDINA BEACH, FL 32034

2023

39-2N-28-0141-0082-0000

BUILDING CHARACTERISTICS

ELEMENT	CD	CONSTRUCTION
Exterior Wall	31	HARDIE BRD 100
Roof Structur	08	IRREGULAR 100
Roof Cover	03	COMP SHNGL 100
Interior Wall	05	DRYWALL 100
Interior Floo	13	LVT/LAMNT 50
Interior Floo	14	CARPET 50
Air Condition	03	CENTRAL 100
Heating Type	04	AIR DUCTED 100
Bedrooms		5 100
Bathrooms		4.5 100
Frame	02	WOOD FRAME 100
Stories	2.	2. 100
Units		0 100
Occupancy	00	NONE 100
Quality	02	Quality Level 02
DOR CODE	0100	SINGLE FAMILY
MAP NUM		MKT AREA 04
NEIGHBORHOOD/LOC	4088.00	

AREA TYPE	TOTAL GROSS AREA	PCT OF BASE	TOT ADJ AREA	SUBAREA MARKET VALUE
BAS	2,236	100	2,236	255,253
FGR	240	55	132	15,068
FGR	441	55	243	27,740
FOP	85	30	26	2,968
FOP	162	30	49	5,594
FST	24	55	13	1,484
FUS	1,239	100	1,239	141,439
STR	28	10	3	342
TOTALS	4,455		3,941	449,890

MARKET ADJUSTMENTS

TYPE	MDL	EFF. AREA	TOT ADJ PTS	EFF. BASE RATE	REPL. COST NEW	AYB	EYB	ECON	FNCT		NORM	% COND
0900	01	3,941	96.6150	114.73	452,151	2020	2020	0	0	0	0.50	99.50

1 SNGL FAM – 100% - 2021 Heated Area: 3475 HX Base Yr 2021

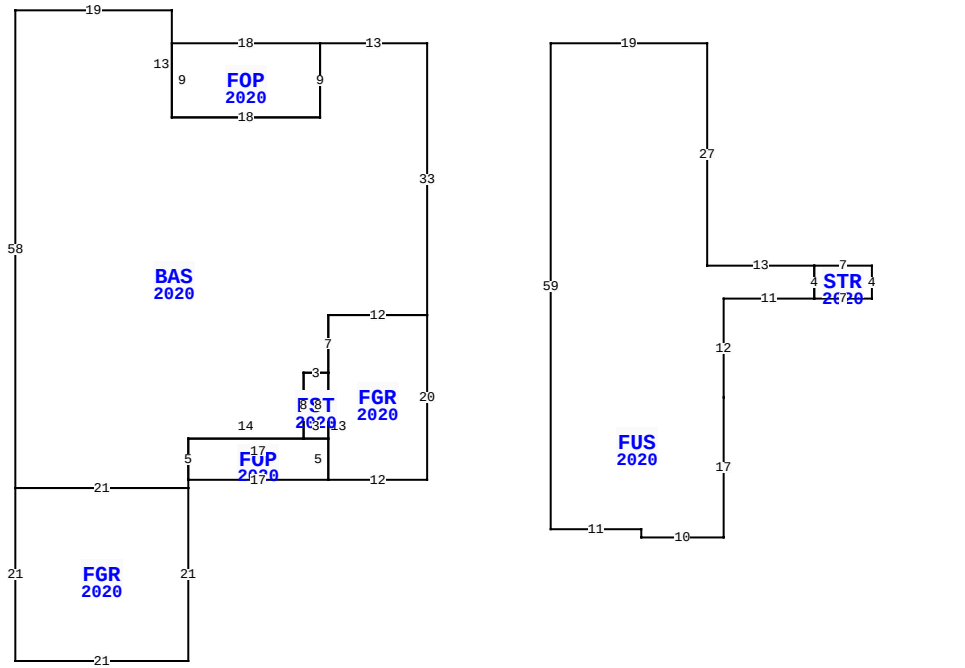

93305 SANDOWN DR, FERNANDINA BEACH

BLD DATE		LGL DATE	
XF DATE		LAND DATE	06/05/2023 MLU
INC DATE		AG DATE	

NASSAU COUNTY PROPERTY

PAGE 1 of 1 4

VALUATION SUMMARY

VALUATION BY		STANDARD
Tax Group: 4	Tax Dist:	
BUILDING MARKET VALUE		449,890
TOTAL MARKET OB/XF VALUE		13,504
TOTAL LAND VALUE - MARKET		75,000
TOTAL MARKET VALUE		538,394
SOH/AGL Deduction		183,852
ASSESSED VALUE		354,542
TOTAL EXEMPTION VALUE	HX HB	50,000
BASE TAXABLE VALUE		304,542
TOTAL JUST VALUE		538,394
NCON VALUE		0
INCOME VALUE		
PREVIOUS YEAR MKT VALUE		451,164

PERMIT NUM	DESCRIPTION	AMT	ISSUED
C1910182	CO ISSUED	0	10/27/2020
B1910182	NEW CONSTR	463,049	01/01/2020

SALES DATA

OFF RECORD Number	DATE	TYPE INST	Q U	V I	RSN CD	SALE PRICE
2407/1904	11/02/2020	SW	Q	I	02	490,000

GRANTOR: AVH NORTH FLORIDA LLC
GRANTEE: GOTH DOUGLAS LAWREN

BUILDING NOTES

BUILDING DIMENSIONS

BAS=[YR=2020] W13 FOP=[YR=2020] W18 S9 E18 N9$ S9 W18 N13 W19 S58 FGR=[YR=2020] S21 E21 N21 W21$ E21 N1 FOP=[YR=2020] E17 FGR=[YR=2020] E12 N20 W12 S7 FST=[YR=2020] W3 S8 E3 N8$ S13$ N5 W17 S5$ N5 E14 N8 E3 N7 E12 N33$ PTR= E15 FUS=[YR=2020] E19 S27 E13 STR=[YR=2020] E7 S4 W7 N4$ S4 W11 S12 S17 W10 N1 W11 N59$ W15$.

EXTRA FEATURES

LN	OB/XF CODE	DESCRIPTION	BLD	CAP	L	W	UNITS	UT	Adj R	ADJ UNIT PRICE	ORIG COND	YEAR ON	YEAR ACTUAL	Q	% COND	OB/XF MKT VALUE	NOTES
1	0855	CONC PAVER	0	100	0	0	1,364.00	SF	10.00	10.00	100	2020	2020	3	99	13,504	

LAND DESCRIPTION

TOTAL OB/XF 13,504

LN	USE CODE	CLS	LAND USE DESCRIPTION	CAP	RD	LOC ZONE	FRONT	DEPTH	TOT LND UTS	UNIT TYPE	DT	DPTH FACT	% COND	TOT ADJ	UNIT PRICE	ADJ UNIT PRICE	LAND VALUE	OTHER ADJUSTMENTS AND NOTES	YEAR	DENSITY	DECL	FRZ	YR	CONSRV
1	000100	C	SFR	100			0.00	0.00	1.00	LT		1.00	1.00	1.00	75,000.00	75,000.00	75,000							

REVIEW DATE 02/24/2021 BY KW Total Acres: 0.00 Total Land Value: 75,000 Market: 0 Agricultural: 0 Common: 75,000 PRINTED 08/02/2023 BY SYS