LOT 18
BARNWELL MANOR PHASE 3
OR 2445/770

DIBUONO RAFAELA B & ANTHONY VINCENT
92760 SHIPTON LANE
FERNANDINA BEACH, FL 32034

2023

39-2N-28-0141-0018-0000

BUILDING CHARACTERISTICS

ELEMENT	CD	CONSTRUCTION
Exterior Wall	31	HARDIE BRD 100
Roof Structur	08	IRREGULAR 100
Roof Cover	03	COMP SHNGL 100
Interior Wall	05	DRYWALL 100
Interior Floo	11	CLAY TILE 60
Interior Floo	14	CARPET 40
Air Condition	03	CENTRAL 100
Heating Type	04	AIR DUCTED 100
Bedrooms		5 100
Bathrooms		4 100
Frame	02	WOOD FRAME 100
Stories	2.	2. 100
Units		0 100
Occupancy	00	NONE 100
Quality	02	Quality Level 02
DOR CODE	0100	SINGLE FAMILY
MAP NUM		MKT AREA 04
NEIGHBORHOOD/LOC	4088.00	

AREA TYPE	TOTAL GROSS AREA	PCT OF BASE	TOT ADJ AREA	SUBAREA MARKET VALUE
BAS	1,333	100	1,333	160,786
FGR	685	55	377	45,474
FOP	173	30	52	6,272
FOP	330	30	99	11,941
FUS	1,874	100	1,874	226,042
STR	80	10	8	965
TOTALS	4,475		3,743	451,481

MARKET ADJUSTMENTS

TYPE	MDL	EFF. AREA	TOT ADJ PTS	EFF. BASE RATE	REPL. COST NEW	AYB	EYB	ECON	FNCT		NORM	% COND
0900	01	3,743	101.5740	120.62	451,481	2022	2022	0	0	0	0.00	100.00

1 SNGL FAM – 0% - 2023 Heated Area: 3207 HX Base Yr

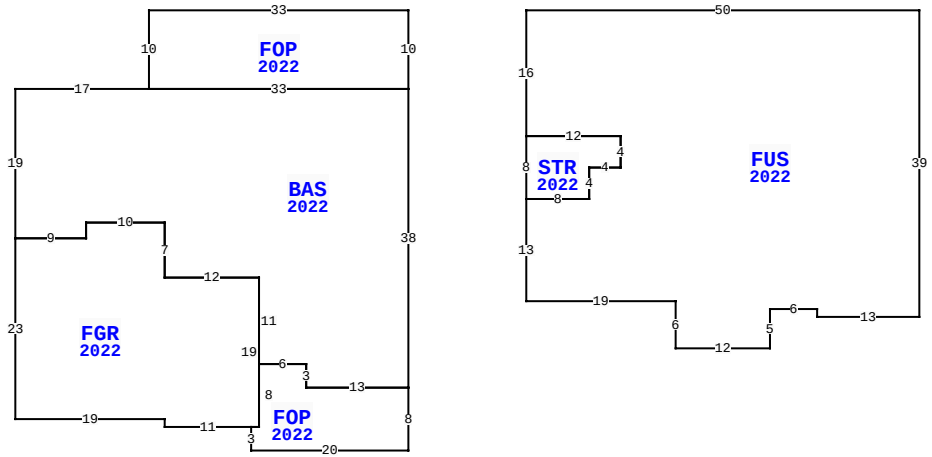

92760 SHIPTON LN, FERNANDINA BEACH

BLD DATE		LGL DATE	
XF DATE		LAND DATE	06/05/2023 MLU
INC DATE		AG DATE	

NASSAU COUNTY PROPERTY

PAGE 1 of 1 4

VALUATION SUMMARY

VALUATION BY	STANDARD
Tax Group: 4	Tax Dist:
BUILDING MARKET VALUE	451,481
TOTAL MARKET OB/XF VALUE	13,400
TOTAL LAND VALUE - MARKET	75,000
TOTAL MARKET VALUE	539,881
SOH/AGL Deduction	0
ASSESSED VALUE	539,881
TOTAL EXEMPTION VALUE	0
BASE TAXABLE VALUE	539,881
TOTAL JUST VALUE	539,881
NCON VALUE	464,881
INCOME VALUE	
PREVIOUS YEAR MKT VALUE	65,000

PERMIT NUM	DESCRIPTION	AMT	ISSUED
22018845	CO ISSUED	0	12/28/2022
22001591	NEW CONSTR	530,343	01/27/2022

SALES DATA

OFF RECORD Number	DATE	TYPE INST	Q / U	V / I	RSN CD	SALE PRICE
2612/0077	12/30/2022	SW	Q	I	01	630,400

GRANTOR: AVH NORTH FLORIDA LLC
GRANTEE: DIBUONO RAFAELA BOE

BUILDING NOTES

BUILDING DIMENSIONS

FOP=[YR=2022] W33 S10 BAS=[YR=2022] W17 S19 FGR=[YR=2022] S23 E19 S1 E11 FOP=[YR=2022] S3 E20 N8 W13 N3 W6 S8 W1$ E1 N19 W12 N7 W10 S2 W9$ E9 N2 E10 S7 E12 S11 E6 S3 E13 N38 W33$ E33 N10$ PTR=E15 FUS=[YR=2022] E50 S39 W13 N1 W6 S5 W12 N6 W19 N13 STR=[YR=2022] N8 E12 S4 W4 S4 W8$ E8 N4 E4 N4 W12 N16$ W15$.

EXTRA FEATURES

LN	OB/XF CODE	DESCRIPTION	BLD	CAP	L	W	UNITS	UT	Adj R	ADJ UNIT PRICE	ORIG COND	YEAR ON	YEAR ACTUAL	Q	% COND	OB/XF MKT VALUE	NOTES
1	0855	CONC PAVER	0	0	0	0	1,304.00	SF	10.00	10.00	100	2022	2022	3	100	13,040	
2	0855	CONC PAVER	0	0	0	0	36.00	SF	10.00	10.00	100	2022	2022	3	100	360	

LAND DESCRIPTION

TOTAL OB/XF 13,400

LN	USE CODE	CLS	LAND USE DESCRIPTION	CAP	RD	LOC ZONE	FRONT	DEPTH	TOT LND UTS	UNIT TYPE	DT	DPTH FACT	% COND	TOT ADJ	UNIT PRICE	ADJ UNIT PRICE	LAND VALUE	OTHER ADJUSTMENTS AND NOTES	YEAR	DENSITY	DECL	FRZ	YR	CONSRV
1	000100	C	SFR	0		PUD	90.00	120.00	1.00	LT		1.00	1.00	1.00	75,000.00	75,000.00	75,000							

REVIEW DATE 01/02/2023 BY DJ Total Acres: 0.00 Total Land Value: 75,000 Market: 0 Agricultural: 0 Common: 75,000 PRINTED 08/02/2023 BY SYS