PT OR 1023/1107

BUFORD GROVE BAPTIST CHURCH INC
PO BOX 430
HILLIARD, FL 32046-0430

2023

38-4N-24-0000-0007-0000

BUILDING CHARACTERISTICS

ELEMENT	CD	CONSTRUCTION
Exterior Wall	19	COMMON BRK 100
Roof Structur	03	GABLE/HIP 100
Roof Cover	03	COMP SHNGL 100
Interior Wall	05	DRYWALL 100
Interior Floo	14	CARPET 80
Interior Floo	08	SHT VINYL 20
Air Condition	03	CENTRAL 100
Heating Type	04	AIR DUCTED 100
Bedrooms		4 100
Bathrooms		3 100
Frame	03	MASONRY 100
Stories	1.	1. 100
Units		0 100
BUD8 Adjustme	04	DIST 01 100
Occupancy	00	NONE 100
Quality	03	Quality Level 03
DOR CODE	7100	CHURCHES
MAP NUM		MKT AREA 09
NEIGHBORHOOD/LOC	9001.00	

AREA TYPE	TOTAL GROSS AREA	PCT OF BASE	TOT ADJ AREA	SUBAREA MARKET VALUE
BAS	1,598	100	1,598	122,677
BAS	572	100	572	43,912
FOP	192	30	58	4,453
FOP	280	30	84	6,448
TOTALS	2,642		2,312	177,490

MARKET ADJUSTMENTS

TYPE	MDL	EFF. AREA	TOT ADJ PTS	EFF. BASE RATE	REPL. COST NEW	AYB	EYB	ECON	FNCT		NORM	% COND
0100	01	2,312	121.5200	109.67	253,557	1969	1982	0	0	0	30.00	70.00

1 SINGLE FAM – 0% - 0 Heated Area: 2170 HX Base Yr

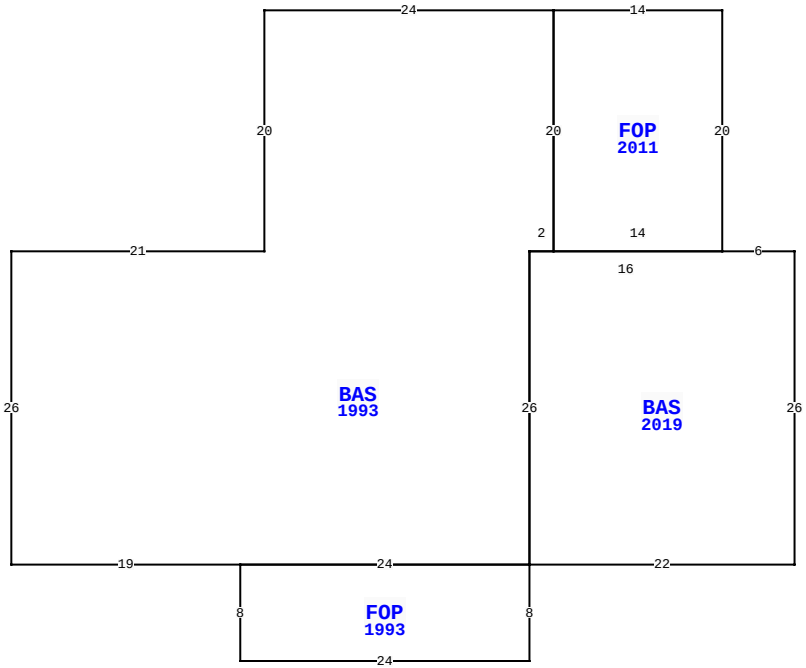

553270 US HWY 1, HILLIARD

BLD DATE	07/25/2007 JH	LGL DATE	
XF DATE		LAND DATE	05/30/2023 MLU
INC DATE		AG DATE	

NASSAU COUNTY PROPERTY

PAGE 1 of 5 4

VALUATION SUMMARY

VALUATION BY		STANDARD
Tax Group: 4	Tax Dist:	
BUILDING MARKET VALUE		5,727,498
TOTAL MARKET OB/XF VALUE		126,217
TOTAL LAND VALUE - MARKET		72,000
TOTAL MARKET VALUE		5,925,715
SOH/AGL Deduction		2,414,010
ASSESSED VALUE		3,511,705
TOTAL EXEMPTION VALUE	02	3,511,705
BASE TAXABLE VALUE		0
TOTAL JUST VALUE		5,925,715
NCON VALUE		0
INCOME VALUE		
PREVIOUS YEAR MKT VALUE		4,517,282

PERMIT NUM	DESCRIPTION	AMT	ISSUED
19001623	REMODEL	30,000	02/19/2019
M18421	H/AC	0	06/01/2013
M10133	H/AC	0	08/01/2005
E0515018	ELEC OTHER	3,000	05/01/2005
P0509461	OTHER	0	05/01/2005
R0507630	REPAIR/RRF	15,000	05/01/2005

SALES DATA

OFF RECORD Number	DATE	TYPE INST	Q U /	V I /	RSN CD	SALE PRICE
1023/1107	12/06/2001	WD	U	I	01	100
GRANTOR: BUFORD GROVE BAPTIST						
GRANTEE: BUFORD GROVE BAPTIS						
0075/0302	1/01/1967	TA	U	V		1,500
GRANTOR:						
GRANTEE:						

BUILDING NOTES

BUILDING DIMENSIONS

BAS=[YR=1993] W24 S20 W21 S26 E19 FOP=[YR=1993] S8 E24 N8
BAS=[YR=2019] E22 N26 W6 FOP=[YR=2011] N20 W14 S20 E14 $W16
S26$ W24$ E24 N26 E2 N20$.

EXTRA FEATURES

LN	OB/XF CODE	DESCRIPTION	BLD	CAP	L	W	UNITS	UT	Adj R	ADJ UNIT PRICE	ORIG COND	YEAR ON	YEAR ACTUAL	Q	% COND	OB/XF MKT VALUE	NOTES
1	0812	CONCRETE C	0	0	0	0	23,120.00	SF	4.00	4.00	100	1980	1980	3	35	32,368	
2	0940	SHEDS/PORT	0	0	10	12	120.00	SF	30.00	30.00	100	1970	1970	3	20	720	
4	0803	ASPHALT C	0	0	0	0	6,905.00	SF	2.00	2.00	100	1980	1980	3	50	6,905	
5	0972	ST LGHT UN	0	0	0	0	2.00	UT	2,530.00	2,530.00	100	1980	1980	3	20	1,012	
6	0350	CARPORT WD	0	0	16	9	144.00	SF	8.58	8.58	100	1990	1990	3	20	247	
7	0812	CONCRETE C	0	0	0	0	15,617.00	SF	4.00	4.00	100	2006	2006	3	88	54,972	
8	0975	ST LT/ARM	0	0	0	0	1.00	UT	500.00	500.00	100	1990	1990	3	29	145	
9	0752	USP	0	0	22	13	286.00	SF	15.00	15.00	100	2007	2007	3	52	2,231	
10	1127	BRICK 8"	0	0	0	0	836.00	SF	11.00	11.00	100	2006	2006	3	97	8,920	
11	0418	EXHST FAN	0	0	0	0	1.00	UT	400.00	400.00	100	1993	1993	3	20	80	

TOTAL OB/XF 107,600

LAND DESCRIPTION

LN	USE CODE	CLS	LAND USE DESCRIPTION	CAP	RD	LOC ZONE	FRONT	DEPTH	TOT LND UTS	UNIT TYPE	DT	DPTH FACT	% COND	TOT ADJ	UNIT PRICE	ADJ UNIT PRICE	LAND VALUE	OTHER ADJUSTMENTS AND NOTES	YEAR	DENSITY	DECL	FRZ	YR	CONSRV
1	007100	C	CHURCH	0	0004	OR	0.00	0.00	4.00	AC		1.00	1.00	1.00	18,000.00	18,000.00	72,000							

REVIEW DATE 05/07/2019 BY TW Total Acres: 4.00 Total Land Value: 72,000 Market: 0 Agricultural: 0 Common: 72,000 PRINTED 08/02/2023 BY SYS

PT OR 1023/1107

BUFORD GROVE BAPTIST CHURCH INC
PO BOX 430
HILLIARD, FL 32046-0430

2023

38-4N-24-0000-0007-0000

NASSAU COUNTY PROPERTY

BUILDING CHARACTERISTICS

ELEMENT	CD	CONSTRUCTION
Exterior Wall	15	CONC BLOCK 90
Exterior Wall	05	AVERAGE 10
Roof Structur	03	GABLE/HIP 100
Roof Cover	12	MODULAR MT 100
Interior Wall	04	PLYWOOD 90
Interior Wall	05	DRYWALL 10
Interior Floo	05	ASPH TILE 70
Interior Floo	14	CARPET 30
Ceiling	02	F.NOT SUS 100
Air Condition	03	CENTRAL 100
Heating Type	04	AIR DUCTED 100
Fixtures		9 100
Frame	01	TYP WD 100
Story Height		10 100
RMS		6 100
Stories	0	0 100
Units		0 100
BUD8 Adjustme	04	DIST 01 100
Quality	00	QUALITY Level 03
Occupancy	00	100

DOR CODE	7100	CHURCHES	
MAP NUM		MKT AREA	09
NEIGHBORHOOD/LOC	9001.00		

AREA TYPE	TOTAL GROSS AREA	PCT OF BASE	TOT ADJ AREA	SUBAREA MARKET VALUE
BAS	2,981	100	2,981	160,527
FOP	100	30	30	1,616
TOTALS	3,081		3,011	162,142

MARKET ADJUSTMENTS

TYPE	MDL	EFF. AREA	TOT ADJ PTS	EFF. BASE RATE	REPL. COST NEW	AYB	EYB	ECON	FNCT		NORM	% COND
7102	04	3,011	90.6984	107.70	324,285	1960	1960	0	0	0	50.00	50.00

2 EDU RELGUS – 0% - 0 Heated Area: 2981 HX Base Yr

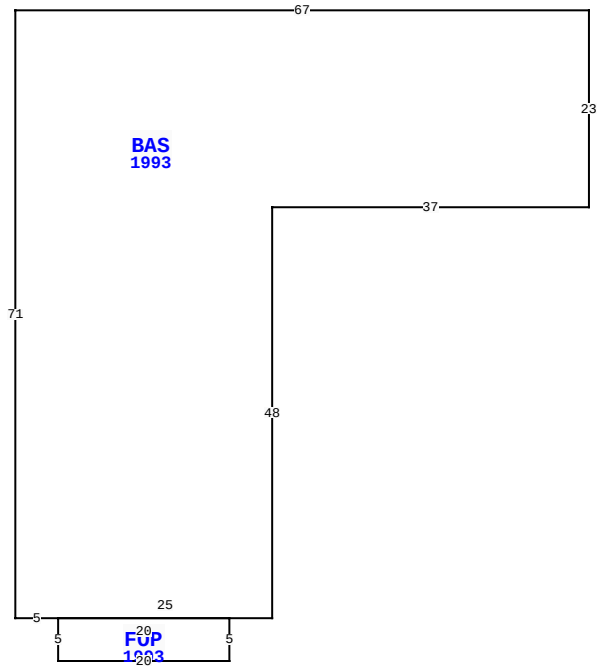

553270 US HWY 1, HILLIARD

BLD DATE	07/25/2007 JH	LGL DATE	
XF DATE		LAND DATE	05/30/2023 MLU
INC DATE		AG DATE	

NASSAU COUNTY PROPERTY — VALUATION SUMMARY

VALUATION BY		STANDARD
Tax Group: 4	Tax Dist:	
BUILDING MARKET VALUE		5,727,498
TOTAL MARKET OB/XF VALUE		126,217
TOTAL LAND VALUE - MARKET		72,000
TOTAL MARKET VALUE		5,925,715
SOH/AGL Deduction		2,414,010
ASSESSED VALUE		3,511,705
TOTAL EXEMPTION VALUE	02	3,511,705
BASE TAXABLE VALUE		0
TOTAL JUST VALUE		5,925,715
NCON VALUE		0
INCOME VALUE		
PREVIOUS YEAR MKT VALUE		4,517,282

PERMIT NUM	DESCRIPTION	AMT	ISSUED
B0515227	NEW CONSTR	1,058,365	05/01/2005
3598	H/AC	800	11/13/1990
6944	CHNGE SRVC	2,290	09/11/1990
6563	NEW CONSTR	720,206	06/26/1990
3180	H/AC	800	10/24/1989

SALES DATA

OFF RECORD Number	DATE	TYPE INST	Q U	V I	RSN CD	SALE PRICE
1023/1107	12/06/2001	WD	U	I	01	100
GRANTOR: BUFORD GROVE BAPTIST						
GRANTEE: BUFORD GROVE BAPTIS						
0075/0302	1/01/1967	TA	U	V		1,500
GRANTOR:						
GRANTEE:						

BUILDING NOTES

BUILDING DIMENSIONS

BAS=[YR=1993] W67 S71 E5 FOP=[YR=1993] S5 E20 N5 W20$ E25 N48 E37 N23$.

EXTRA FEATURES

LN	OB/XF CODE	DESCRIPTION	BLD	CAP	L	W	UNITS	UT	Adj R	ADJ UNIT PRICE	ORIG COND	YEAR ON	YEAR ACTUAL	Q	% COND	OB/XF MKT VALUE	NOTES
12	0505	FLAGPOLE A	0	0	0	0	25.00	LF	50.00	50.00	100	2006	2006	3	31	388	
13	4950	BOLLARD	0	0	0	0	3.00	UT	100.00	100.00	100	2006	2006	3	100	300	
14	0402	CONC BUMPE	0	0	0	0	4.00	UT	25.00	25.00	100	2006	2006	3	91	91	
15	0381	COOLER	0	0	9	8	72.00	SF	82.50	82.50	100	2003	2003	3	54	3,208	
16	0383	FREEZER	0	0	9	5	45.00	SF	105.00	105.00	100	2003	2003	3	54	2,552	
17	0812	CONCRETE C	0	0	50	26	1,300.00	SF	4.00	4.00	100	2002	2002	3	83	4,316	
18	0462	ST/AL FNC	0	0	1676	0	1,676.00	SF	10.00	10.00	100	2005	2005	3	44	7,374	
19	0505	FLAGPOLE A	0	0	0	0	25.00	LF	50.00	50.00	100	2006	2006	3	31	388	

TOTAL OB/XF 18,617

LAND DESCRIPTION

LN	USE CODE	CLS	LAND USE DESCRIPTION	CAP	RD	LOC ZONE	FRONT	DEPTH	TOT LND UTS	UNIT TYPE	DT	DPTH FACT	% COND	TOT ADJ	UNIT PRICE	ADJ UNIT PRICE	LAND VALUE	OTHER ADJUSTMENTS AND NOTES	YEAR	DENSITY	DECL	FRZ	YR	CONSRV

REVIEW DATE 05/07/2019 BY TW Total Acres: 4.00 Total Land Value: 72,000 Market: 0 Agricultural: 0 Common: 72,000 PRINTED 08/02/2023 BY SYS

PT OR 1023/1107

BUFORD GROVE BAPTIST CHURCH INC
PO BOX 430
HILLIARD, FL 32046-0430

2023

38-4N-24-0000-0007-0000

BUILDING CHARACTERISTICS

ELEMENT	CD	CONSTRUCTION
Exterior Wall	20	FACE BRICK 90
Exterior Wall	15	CONC BLOCK 10
Roof Structur	04	WOOD TRUSS 100
Roof Cover	12	MODULAR MT 100
Interior Wall	05	DRYWALL 100
Interior Floo	14	CARPET 80
Interior Floo	08	SHT VINYL 20
Ceiling	01	FIN.SUSPD 100
Air Condition	03	CENTRAL 100
Heating Type	04	AIR DUCTED 100
Fixtures		27 100
Frame	03	MASONRY 100
Story Height		0 100
RMS		17 100
Stories	1.5	1.5 100
Units		0 100
BUD8 Adjustme	04	DIST 01 100
Occupancy	00	NONE 100
Quality	03	Quality Level 03
DOR CODE	7100	CHURCHES
MAP NUM		MKT AREA 09
NEIGHBORHOOD/LOC	9001.00	

AREA TYPE	TOTAL GROSS AREA	PCT OF BASE	TOT ADJ AREA	SUBAREA MARKET VALUE
BAS	6,884	100	6,884	714,568
FOP	234	30	70	7,266
FOP	234	30	70	7,266
FOP	240	30	72	7,474
FUS	2,852	100	2,852	296,041
UCP	760	20	152	15,778
TOTALS	11,204		10,100	1,048,394

MARKET ADJUSTMENTS

TYPE	MDL	EFF. AREA	TOT ADJ PTS	EFF. BASE RATE	REPL. COST NEW	AYB	EYB	ECON	FNCT		NORM	% COND
7101	04	10,100	88.7292	149.29	1,507,829	1973	1976	0	0	0	30.47	69.53

3 CHURCH – 0% - 0 Heated Area: 9736 HX Base Yr

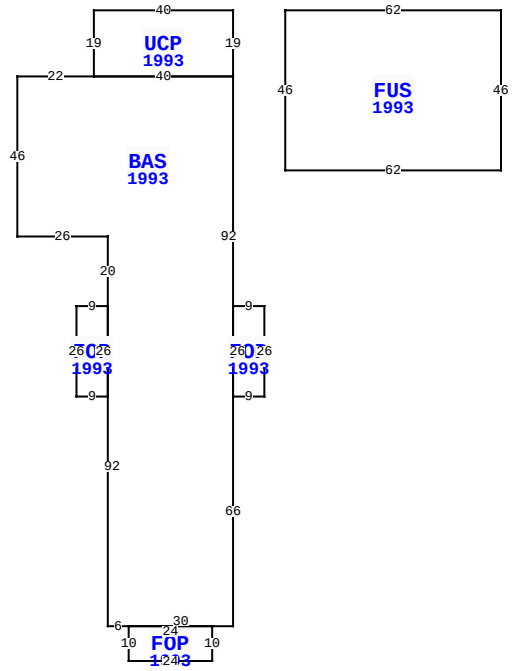

553270 US HWY 1, HILLIARD

BLD DATE	07/25/2007 JH	LGL DATE	
XF DATE		LAND DATE	05/30/2023 MLU
INC DATE		AG DATE	

NASSAU COUNTY PROPERTY

PAGE 3 of 5 4

VALUATION SUMMARY

VALUATION BY		STANDARD
Tax Group: 4	Tax Dist:	
BUILDING MARKET VALUE		5,727,498
TOTAL MARKET OB/XF VALUE		126,217
TOTAL LAND VALUE - MARKET		72,000
TOTAL MARKET VALUE		5,925,715
SOH/AGL Deduction		2,414,010
ASSESSED VALUE		3,511,705
TOTAL EXEMPTION VALUE	02	3,511,705
BASE TAXABLE VALUE		0
TOTAL JUST VALUE		5,925,715
NCON VALUE		0
INCOME VALUE		
PREVIOUS YEAR MKT VALUE		4,517,282

PERMIT NUM	DESCRIPTION	AMT	ISSUED

SALES DATA

OFF RECORD Number	DATE	TYPE INST	Q / U	V / I	RSN CD	SALE PRICE
1023/1107	12/06/2001	WD	U	I	01	100
GRANTOR: BUFORD GROVE BAPTIST						
GRANTEE: BUFORD GROVE BAPTIS						
0075/0302	1/01/1967	TA	U	V		1,500
GRANTOR:						
GRANTEE:						

BUILDING NOTES

BUILDING DIMENSIONS

UCP=[YR=1993] W40 S19 BAS=[YR=1993] W22 S46 E26 S20
FOP=[YR=1993] W9 S26 E9 N26$ S92 E6 FOP=[YR=1993] S10 E24 N10
W24$ E30 N66 FOP=[YR=1993] E9 N26 W9 S26$ N92 W40$ E40 N19$
PTR=E15 FUS=[YR=1993] E62 S46 W62 N46$ W15$.

EXTRA FEATURES

L N	OB/XF CODE	DESCRIPTION	BLD	CAP	L	W	UNITS	UT	Adj R	ADJ UNIT PRICE	ORIG COND	YEAR ON	YEAR ACTUAL	Q	% COND	OB/XF MKT VALUE	NOTES

LAND DESCRIPTION

TOTAL OB/XF 0

L N	USE CODE	CLS	LAND USE DESCRIPTION	CAP	R D	LOC ZONE	FRONT	DEPTH	TOT LND UTS	UNIT TYPE	D T	DPTH FACT	% COND	TOT ADJ	UNIT PRICE	ADJ UNIT PRICE	LAND VALUE	OTHER ADJUSTMENTS AND NOTES	YEAR	DENSITY	DECL	FRZ	YR	CONSRV

REVIEW DATE 05/07/2019 BY TW Total Acres: 4.00 Total Land Value: 72,000 Market: 0 Agricultural: 0 Common: 72,000 PRINTED 08/02/2023 BY SYS

PT OR 1023/1107

BUFORD GROVE BAPTIST CHURCH INC
PO BOX 430
HILLIARD, FL 32046-0430

2023

38-4N-24-0000-0007-0000

BUILDING CHARACTERISTICS

ELEMENT	CD	CONSTRUCTION
Exterior Wall	25	MOD METAL 100
Roof Structur	03	GABLE/HIP 100
Roof Cover	12	MODULAR MT 100
Interior Wall	01	MINIMUM 50
Interior Wall	02	WALL BD/WD 50
Interior Floo	16	EPOXY STRP 100
Ceiling	04	NONE 100
Air Condition	03	CENTRAL 100
Heating Type	04	AIR DUCTED 100
Fixtures		23 100
Frame	05	STEEL 100
Story Height		20 100
RMS		8 100
Stories	1.	1. 100
Units		0 100
Occupancy	00	NONE 100
Quality	03	Quality Level 03
DOR CODE	7100	CHURCHES
MAP NUM		MKT AREA 09
NEIGHBORHOOD/LOC	9001.00	

AREA TYPE	TOTAL GROSS AREA	PCT OF BASE	TOT ADJ AREA	SUBAREA MARKET VALUE
BAS	11,250	100	11,250	1,237,445
FCP	600	30	180	19,799
FOP	120	30	36	3,960
FOP	252	30	76	8,360
GOF	768	110	845	92,946
UST	372	40	149	16,389
UST	1,392	40	557	61,268
TOTALS	14,754		13,093	1,440,166

MARKET ADJUSTMENTS

TYPE	MDL	EFF. AREA	TOT ADJ PTS	EFF. BASE RATE	REPL. COST NEW	AYB	EYB	ECON	FNCT		NORM	% COND
7102	04	13,093	104.0760	123.59	1,618,164	1991	1992	0	0	0	11.00	89.00

4 EDU RELGUS – 0% - 0 Heated Area: 12018 HX Base Yr

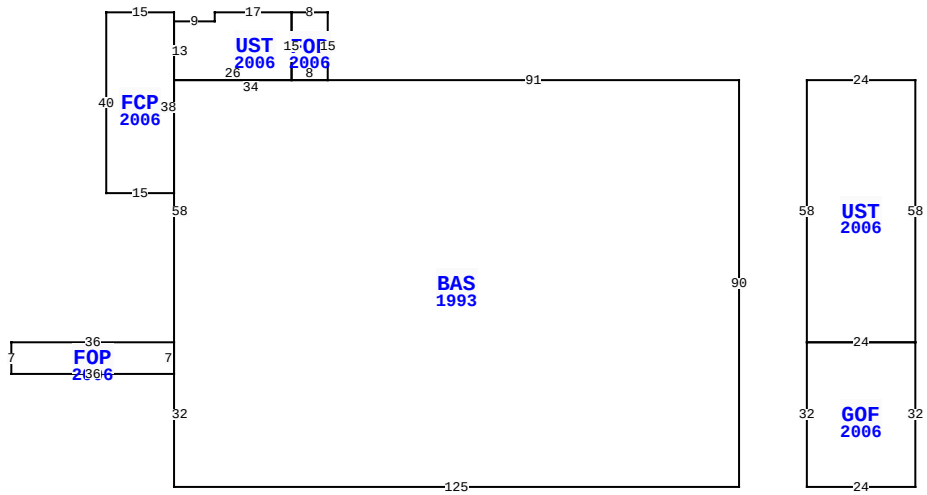

553270 US HWY 1, HILLIARD

BLD DATE	07/25/2007 JH	LGL DATE	
XF DATE		LAND DATE	05/30/2023 MLU
INC DATE		AG DATE	

NASSAU COUNTY PROPERTY

PAGE 4 of 5 4

VALUATION SUMMARY

VALUATION BY		STANDARD
Tax Group: 4	Tax Dist:	
BUILDING MARKET VALUE		5,727,498
TOTAL MARKET OB/XF VALUE		126,217
TOTAL LAND VALUE - MARKET		72,000
TOTAL MARKET VALUE		5,925,715
SOH/AGL Deduction		2,414,010
ASSESSED VALUE		3,511,705
TOTAL EXEMPTION VALUE	02	3,511,705
BASE TAXABLE VALUE		0
TOTAL JUST VALUE		5,925,715
NCON VALUE		0
INCOME VALUE		
PREVIOUS YEAR MKT VALUE		4,517,282

PERMIT NUM	DESCRIPTION	AMT	ISSUED

SALES DATA

OFF RECORD Number	DATE	TYPE INST	Q U	V I	RSN CD	SALE PRICE
1023/1107	12/06/2001	WD	U	I	01	100
GRANTOR: BUFORD GROVE BAPTIST						
GRANTEE: BUFORD GROVE BAPTIS						
0075/0302	1/01/1967	TA	U	V		1,500
GRANTOR:						
GRANTEE:						

BUILDING NOTES

BUILDING DIMENSIONS

BAS=[YR=1993] W91 FOP=[YR=2006] N15 W8 UST=[YR=2006] W17 S2 W9 FCP=[YR=2006] N2 W15 S40 E15 N38$ S13 E26 N15$ S15 E8$ W34 S58 FOP=[YR=2006] W36 S7 E36 N7$ S32 E125 N90$ PTR= E15 UST=[YR=2006] E24 S58 GOF=[YR=2006] S32 W24 N32 E24$ W24 N58$ W15$.

EXTRA FEATURES

LN	OB/XF CODE	DESCRIPTION	BLD	CAP	L	W	UNITS	UT	Adj R	ADJ UNIT PRICE	ORIG COND	YEAR ON	YEAR ACTUAL	Q	% COND	OB/XF MKT VALUE	NOTES

LAND DESCRIPTION

TOTAL OB/XF 0

LN	USE CODE	CLS	LAND USE DESCRIPTION	CAP	RD	LOC ZONE	FRONT	DEPTH	TOT LND UTS	UNIT TYPE	DT	DPTH FACT	% COND	TOT ADJ	UNIT PRICE	ADJ UNIT PRICE	LAND VALUE	OTHER ADJUSTMENTS AND NOTES	YEAR	DENSITY	DECL	FRZ	YR	CONSRV

REVIEW DATE 05/07/2019 BY TW Total Acres: 4.00 Total Land Value: 72,000 Market: 0 Agricultural: 0 Common: 72,000 PRINTED 08/02/2023 BY SYS

PT OR 1023/1107

BUFORD GROVE BAPTIST CHURCH INC
PO BOX 430
HILLIARD, FL 32046-0430

2023

38-4N-24-0000-0007-0000

BUILDING CHARACTERISTICS

ELEMENT	CD	CONSTRUCTION
Exterior Wall	20	FACE BRICK 70
Exterior Wall	25	MOD METAL 30
Roof Structur	08	IRREGULAR 100
Roof Cover	12	MODULAR MT 100
Interior Wall	05	DRYWALL 100
Interior Floo	14	CARPET 90
Interior Floo	11	CLAY TILE 10
Air Condition	03	CENTRAL 100
Heating Type	04	AIR DUCTED 100
Fixtures		19 100
Frame	05	STEEL 100
Story Height		17 100
RMS		2 100
Stories	2.	2. 100
Units		0 100
Occupancy	00	NONE 100
Quality	04	Quality Level 04
DOR CODE	7100	CHURCHES
MAP NUM		MKT AREA 09
NEIGHBORHOOD/LOC	9001.00	

AREA TYPE	TOTAL GROSS AREA	PCT OF BASE	TOT ADJ AREA	SUBAREA MARKET VALUE
BAS	14,192	100	14,192	2,505,142
FUS	1,728	100	1,728	305,023
UST	108	40	43	7,590
UST	136	40	54	9,532
UST	414	40	166	29,302
UST	606	40	242	42,717
TOTALS	17,184		16,425	2,899,306

MARKET ADJUSTMENTS

TYPE	MDL	EFF. AREA	TOT ADJ PTS	EFF. BASE RATE	REPL. COST NEW	AYB	EYB	ECON	FNCT		NORM	% COND
7101	04	16,425	117.6189	197.89	3,250,343	2006	2006	0	0	0	10.80	89.20

5 CHURCH – 0% - 0 Heated Area: 15920 HX Base Yr

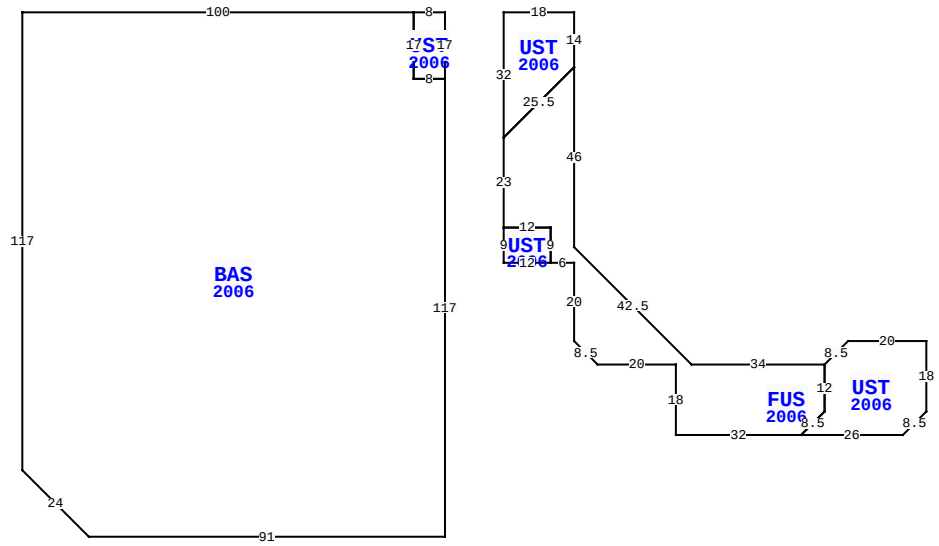

553270 US HWY 1, HILLIARD

BLD DATE	07/25/2007 JH	LGL DATE	
XF DATE		LAND DATE	05/30/2023 MLU
INC DATE		AG DATE	

NASSAU COUNTY PROPERTY

PAGE 5 of 5 4

VALUATION SUMMARY

VALUATION BY		STANDARD
Tax Group: 4	Tax Dist:	
BUILDING MARKET VALUE		5,727,498
TOTAL MARKET OB/XF VALUE		126,217
TOTAL LAND VALUE - MARKET		72,000
TOTAL MARKET VALUE		5,925,715
SOH/AGL Deduction		2,414,010
ASSESSED VALUE		3,511,705
TOTAL EXEMPTION VALUE	02	3,511,705
BASE TAXABLE VALUE		0
TOTAL JUST VALUE		5,925,715
NCON VALUE		0
INCOME VALUE		
PREVIOUS YEAR MKT VALUE		4,517,282

PERMIT NUM	DESCRIPTION	AMT	ISSUED

SALES DATA

OFF RECORD Number	DATE	TYPE INST	Q / U	V / I	RSN CD	SALE PRICE
1023/1107	12/06/2001	WD	U	I	01	100
GRANTOR: BUFORD GROVE BAPTIST						
GRANTEE: BUFORD GROVE BAPTIS						
0075/0302	1/01/1967	TA	U	V		1,500
GRANTOR:						
GRANTEE:						

BUILDING NOTES

BUILDING DIMENSIONS

UST=[YR=2006] W8 BAS=[YR=2006] W100 S117 R17 D17 E91 N117 W8 N17$ S17 E8 N17$ PTR=E15 UST=[YR=2006] E18 S14 FUS=[YR=2006] S46 R30 D30 E34 UST=[YR=2006] R6 U6 E20 S18 D6 L6 W26 U6 R6 N12$ S12 D6 L6 W32 N18 W20 U6 L6 N20 W6 UST=[YR=2006] W12 N9 E12 S9$ N9 W12 N23 R18 U18 $ D18 L18 N32$ W15$.

EXTRA FEATURES

L N	OB/XF CODE	DESCRIPTION	BLD	CAP	L	W	UNITS	UT	Adj R	ADJ UNIT PRICE	ORIG COND	YEAR ON	YEAR ACTUAL	Q	% COND	OB/XF MKT VALUE	NOTES

LAND DESCRIPTION

TOTAL OB/XF 0

L N	USE CODE	CLS	LAND USE DESCRIPTION	CAP	R D	LOC ZONE	FRONT	DEPTH	TOT LND UTS	UNIT TYPE	D T	DPTH FACT	% COND	TOT ADJ	UNIT PRICE	ADJ UNIT PRICE	LAND VALUE	OTHER ADJUSTMENTS AND NOTES	YEAR	DENSITY	DECL	FRZ	YR	CONSRV

REVIEW DATE 05/07/2019 BY TW Total Acres: 4.00 Total Land Value: 72,000 Market: 0 Agricultural: 0 Common: 72,000 PRINTED 08/02/2023 BY SYS