PT OF REUBEN LASSETER GRANT
IN OR 2165/1826

BLAUDOW DELORES A TRUST/BLAUDOW DELORES A TRUSTEE
18391 AVALON DR
HILLIARD, FL 32046

2023

38-4N-23-0000-0001-0030

NASSAU COUNTY PROPERTY

BUILDING CHARACTERISTICS

ELEMENT	CD	CONSTRUCTION
Exterior Wall	05	AVERAGE 100
Roof Structur	03	GABLE/HIP 100
Roof Cover	03	COMP SHNGL 100
Interior Wall	05	DRYWALL 100
Interior Floo	14	CARPET 70
Interior Floo	11	CLAY TILE 30
Air Condition	03	CENTRAL 100
Heating Type	04	AIR DUCTED 100
Bedrooms		3 100
Bathrooms		2 100
Frame	02	WOOD FRAME 100
Stories	1.	1. 100
Units		0 100
BUD8 Adjustme	04	DIST 01 100
Occupancy	00	NONE 100
Quality	01	Quality Level 01
DOR CODE	0100	SINGLE FAMILY
MAP NUM		MKT AREA 09
NEIGHBORHOOD/LOC	9001.00	

AREA TYPE	TOTAL GROSS AREA	PCT OF BASE	TOT ADJ AREA	SUBAREA MARKET VALUE
BAS	1,966	100	1,966	198,244
FDU	88	65	57	5,748
FDU	180	65	117	11,797
FGR	552	55	304	30,654
FOP	168	30	50	5,042
FSP	288	40	115	11,596
UOP	60	20	12	1,210
UOP	112	20	22	2,218
TOTALS	3,414		2,643	266,510

MARKET ADJUSTMENTS

TYPE	MDL	EFF. AREA	TOT ADJ PTS	EFF. BASE RATE	REPL. COST NEW	AYB	EYB	ECON	FNCT		NORM	% COND
0900	01	2,643	94.0896	111.73	295,302	2002	2002	0	0	0	9.75	90.25

1 SNGL FAM – 100% - 2018 Heated Area: 1966 HX Base Yr 2018

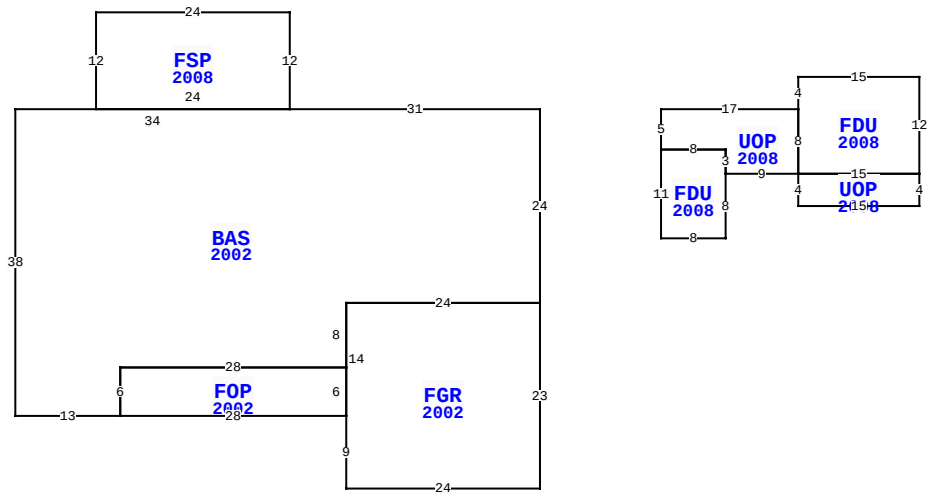

18391 AVALON DR, HILLIARD

BLD DATE		LGL DATE	
XF DATE		LAND DATE	06/16/2023 MLU
INC DATE		AG DATE	

VALUATION SUMMARY

VALUATION BY		STANDARD
Tax Group: 4	Tax Dist:	
BUILDING MARKET VALUE		269,690
TOTAL MARKET OB/XF VALUE		14,228
TOTAL LAND VALUE - MARKET		104,690
TOTAL MARKET VALUE		388,608
SOH/AGL Deduction		190,321
ASSESSED VALUE		198,287
TOTAL EXEMPTION VALUE	HX HB	50,000
BASE TAXABLE VALUE		148,287
TOTAL JUST VALUE		388,608
NCON VALUE		0
INCOME VALUE		
PREVIOUS YEAR MKT VALUE		316,255

PERMIT NUM	DESCRIPTION	AMT	ISSUED
2300776	REPAIR/RRF	34,860	01/19/2023
B029319	NEW CONSTR	151,957,900	02/01/2002
E018436	CHNGE SRVC	0	08/01/2001
MH002977	MH MOVE-ON	0	02/01/2000
B963532	CARPORT	8,942	02/01/1997
MH951034	MH MOVE-ON	0	08/01/1995

SALES DATA

OFF RECORD Number	DATE	TYPE INST	Q U	V I	RSN CD	SALE PRICE
2165/1826	12/21/2017	WD	U	I	37	275,000
GRANTOR: HILLIARD AVALON FARM						
GRANTEE: BLAUDOW DELORES A T						
1791/1919	4/27/2012	WD	Q	I	01	565,000
GRANTOR: CAIN RICHARD Y & DEBO						
GRANTEE: HILLIARD AVALON FAR						

BUILDING NOTES

EXTRA FEATURES

LN	OB/XF CODE	DESCRIPTION	BLD	CAP	L	W	UNITS	UT	Adj R	ADJ UNIT PRICE	ORIG COND	YEAR ON	YEAR ACTUAL	Q	% COND	OB/XF MKT VALUE	NOTES
3	0810	CONCRETE A	0	100	16	8	128.00	SF	6.50	6.50	100	2002	2002	3	83	691	
5	0525	GAZEBO	0	100	0	0	1.00	UT	5,000.00	5,000.00	100	2000	2000	3	29	1,450	
6	0812	CONCRETE C	0	100	0	0	3,236.00	SF	4.00	4.00	100	2002	2002	3	83	10,744	
7	1242	WD DECK A	0	100	0	0	350.00	SF	10.00	10.00	100	2002	2002	3	21	735	
8	1076	TRELLIS A	0	100	15	15	225.00	SF	7.50	7.50	100	2003	2003	3	36	608	

BUILDING DIMENSIONS

BAS=[YR=2002] W31 FSP=[YR=2008] N12 W24 S12 E24 $ W34 S38 E13 FOP=[YR=2002] E28 FGR=[YR=2002] S9 E24 N23 W24 S14 $ N6 W28 S6 $ N6 E28 N8 E24 N24 $ PTR=E15 UOP=[YR=2008] E17 FDU=[YR=2008] N4 E15 S12 UOP=[YR=2008] S4 W15 N4 E15$ W15 N8$ S8 W9 FDU=[YR=2008] S8 W8 N11 E8 S3$ N3 W8 N5$ W15$.

LAND DESCRIPTION

TOTAL OB/XF 14,228

LN	USE CODE	CLS	LAND USE DESCRIPTION	CAP	RD	LOC ZONE	FRONT	DEPTH	TOT LND UTS	UNIT TYPE	DT	DPTH FACT	% COND	TOT ADJ	UNIT PRICE	ADJ UNIT PRICE	LAND VALUE	OTHER ADJUSTMENTS AND NOTES	YEAR	DENSITY	DECL	FRZ	YR	CONSRV
1	000115	C	SFR ACRES	100	0007	OR	0.00	0.00	5.51	AC		1.00	1.00	1.00	19,000.00	19,000.00	104,690							

REVIEW DATE 06/05/2018 BY TWA Total Acres: 5.51 Total Land Value: 104,690 Market: 0 Agricultural: 0 Common: 104,690 PRINTED 08/02/2023 BY SYS

PT OF REUBEN LASSETER GRANT
IN OR 2165/1826

BLAUDOW DELORES A TRUST/BLAUDOW DELORES A TRUSTEE
18391 AVALON DR
HILLIARD, FL 32046

2023

38-4N-23-0000-0001-0030

NASSAU COUNTY PROPERTY

BUILDING CHARACTERISTICS

ELEMENT	CD	CONSTRUCTION
Exterior Wall	05	AVERAGE 50
Exterior Wall	29	NONE 50
Roof Structur	03	GABLE/HIP 100
Roof Cover	03	COMP SHNGL 100
Interior Wall		N/A 100
Interior Floo	03	CONC FINSH 100
Air Condition	99	N/A 100
Heating Type		N/A 100
Bedrooms		0 100
Bathrooms		0 100
Frame	02	WOOD FRAME 100
Stories	1.	1. 100
Units		0 100
Occupancy	00	NONE 100
Quality	03	Quality Level 03

DOR CODE 0100 SINGLE FAMILY
MAP NUM | MKT AREA 09
NEIGHBORHOOD/LOC 9001.00

AREA TYPE	TOTAL GROSS AREA	PCT OF BASE	TOT ADJ AREA	SUBAREA MARKET VALUE
FGR	486	55	267	2,406
UCP	432	20	86	775
TOTALS	918		353	3,180

MARKET ADJUSTMENTS

TYPE	MDL	EFF. AREA	TOT ADJ PTS	EFF. BASE RATE	REPL. COST NEW	AYB	EYB	ECON	FNCT		NORM	% COND
6500	01	353	33.0000	11.55	4,077	2006	2006	0	0	0	22.00	78.00

2 GARAGE RES – 100% - 2018 Heated Area: 0 HX Base Yr 2018

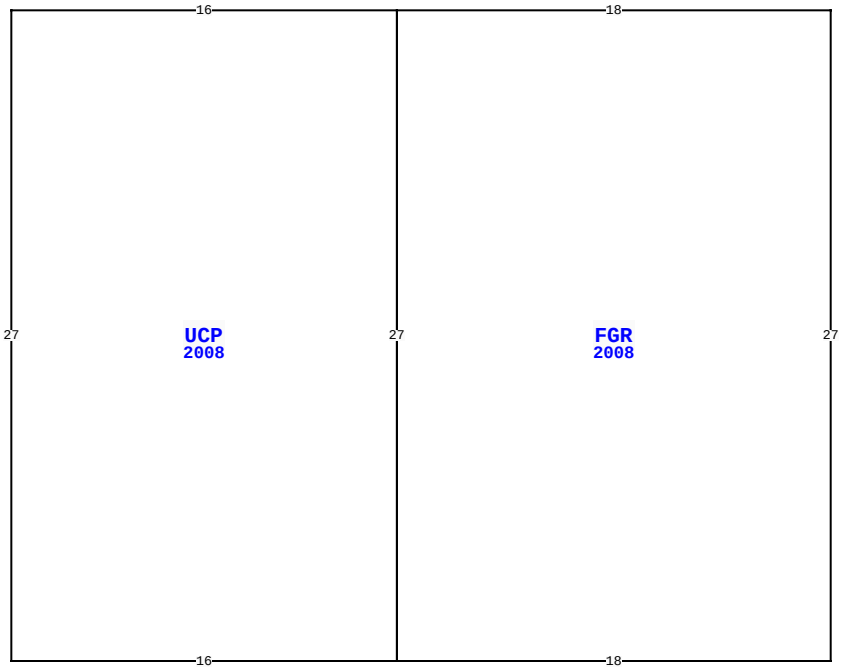

BLD DATE		LGL DATE	
XF DATE		LAND DATE	06/16/2023 MLU
INC DATE		AG DATE	

18391 AVALON DR, HILLIARD

VALUATION SUMMARY

VALUATION BY		STANDARD
Tax Group: 4	Tax Dist:	
BUILDING MARKET VALUE		269,690
TOTAL MARKET OB/XF VALUE		14,228
TOTAL LAND VALUE - MARKET		104,690
TOTAL MARKET VALUE		388,608
SOH/AGL Deduction		190,321
ASSESSED VALUE		198,287
TOTAL EXEMPTION VALUE	HX HB	50,000
BASE TAXABLE VALUE		148,287
TOTAL JUST VALUE		388,608
NCON VALUE		0
INCOME VALUE		
PREVIOUS YEAR MKT VALUE		316,255

PERMIT NUM	DESCRIPTION	AMT	ISSUED
8061	CHNGE SRVC	400	03/20/1992

SALES DATA

OFF RECORD Number	DATE	TYPE INST	Q / U	V / I	RSN CD	SALE PRICE
2165/1826	12/21/2017	WD	U	I	37	275,000
GRANTOR: HILLIARD AVALON FARM						
GRANTEE: BLAUDOW DELORES A T						
1791/1919	4/27/2012	WD	Q	I	01	565,000
GRANTOR: CAIN RICHARD Y & DEBO						
GRANTEE: HILLIARD AVALON FAR						

BUILDING NOTES

BUILDING DIMENSIONS

UCP=[YR=2008] E16 FGR=[YR=2008] E18 S27 W18 N27$ S27 W16 N27$.

EXTRA FEATURES

L N	OB/XF CODE	DESCRIPTION	BLD	CAP	L	W	UNITS	UT	Adj R	ADJ UNIT PRICE	ORIG COND	YEAR ON	YEAR ACTUAL	Q	% COND	OB/XF MKT VALUE	NOTES

LAND DESCRIPTION

TOTAL OB/XF 0

L N	USE CODE	CLS	LAND USE DESCRIPTION	CAP	R D	LOC ZONE	FRONT	DEPTH	TOT LND UTS	UNIT TYPE	D T	DPTH FACT	% COND	TOT ADJ	UNIT PRICE	ADJ UNIT PRICE	LAND VALUE	OTHER ADJUSTMENTS AND NOTES	YEAR	DENSITY	DECL	FRZ	YR	CONSRV

REVIEW DATE 06/05/2018 BY TWA Total Acres: 5.51 Total Land Value: 104,690 Market: 0 Agricultural: 0 Common: 104,690 PRINTED 08/02/2023 BY SYS