LOT 48
BRADY POINT PRESERVE PB 7/76

CARNES VALERIE L
96175 BRADY POINT RD
FERNANDINA BEACH, FL 32034

2023

38-2N-28-0180-0048-0000

BUILDING CHARACTERISTICS

ELEMENT	CD	CONSTRUCTION
Exterior Wall	31	HARDIE BRD 100
Roof Structur	08	IRREGULAR 100
Roof Cover	03	COMP SHNGL 100
Interior Wall	05	DRYWALL 100
Interior Floo	12	HARDWOOD 60
Interior Floo	11	CLAY TILE 40
Air Condition	03	CENTRAL 100
Heating Type	04	AIR DUCTED 100
Bedrooms		4 100
Bathrooms		3 100
Frame	02	WOOD FRAME 100
Stories	2.	2. 100
Units		0 100
Quality	03	Quality Level 03
DOR CODE	0100	SINGLE FAMILY
MAP NUM		MKT AREA 04
NEIGHBORHOOD/LOC	4014.00	

AREA TYPE	TOTAL GROSS AREA	PCT OF BASE	TOT ADJ AREA	SUBAREA MARKET VALUE
BAS	2,438	100	2,438	439,897
FGR	975	55	536	96,712
FOP	63	30	19	3,428
FOP	180	30	54	9,743
FSP	522	40	209	37,711
FST	76	55	42	7,579
FUS	209	100	209	37,711
FUS	928	100	928	167,443
STR	32	10	3	541
STR	40	10	4	722
TOTALS	5,517		4,447	802,388

MARKET ADJUSTMENTS

TYPE	MDL	EFF. AREA	TOT ADJ PTS	EFF. BASE RATE	REPL. COST NEW	AYB	EYB	ECON	FNCT		NORM	% COND
0500	11	4,447	129.8651	185.06	822,962	2016	2016	0	0	0	2.50	97.50

1 SFR CUST – 0% - 2023 Heated Area: 3575 HX Base Yr

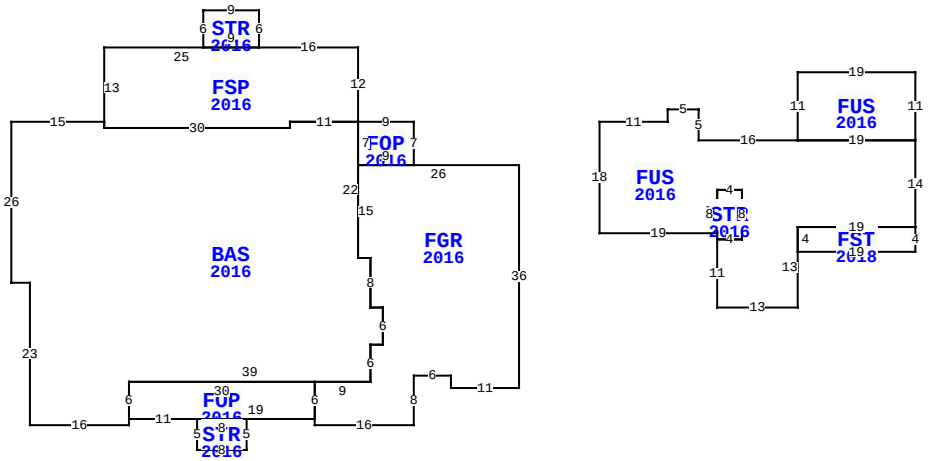

** This building has 11 Sub-Areas

96175 BRADY POINT RD, FERNANDINA BEACH

BLD DATE		LGL DATE	
XF DATE		LAND DATE	
INC DATE		AG DATE	

NASSAU COUNTY PROPERTY

PAGE 1 of 1 4

VALUATION SUMMARY

VALUATION BY	STANDARD
Tax Group: 4	Tax Dist:
BUILDING MARKET VALUE	802,388
TOTAL MARKET OB/XF VALUE	20,677
TOTAL LAND VALUE - MARKET	140,000
TOTAL MARKET VALUE	963,065
SOH/AGL Deduction	0
ASSESSED VALUE	963,065
TOTAL EXEMPTION VALUE	0
BASE TAXABLE VALUE	963,065
TOTAL JUST VALUE	963,065
NCON VALUE	0
INCOME VALUE	
PREVIOUS YEAR MKT VALUE	883,391

PERMIT NUM	DESCRIPTION	AMT	ISSUED
B1530763	CO ISSUED	0	04/18/2016
B1530763	NEW CONSTR	408,594	07/01/2015

SALES DATA

OFF RECORD Number	DATE	TYPE INST	Q U	V I	RSN CD	SALE PRICE
2527/0398	1/06/2022	WD	Q	I	01	1,167,000
GRANTOR: ROTHENBERG STEVEN & E						
GRANTEE: CARNES VALERIE L						
2223/1296	9/13/2018	WD	Q	I	01	850,000
GRANTOR: DICKINSON MICHAEL & K						
GRANTEE: ROTHENBERG STEVEN S						

BUILDING NOTES

BUILDING DIMENSIONS

FOP=[YR=2016] W9 FSP=[YR=2016] N12 W16 STR=[YR=2016] N6 W9 S6 E9$ W25 S13 E30 N1 E11$ BAS=[YR=2016] W11 S1 W30 N1 W15 S26 E3 S23 E16 N1 FOP=[YR=2016] E11 STR=[YR=2016] S5 E8 N5 W8$ E19 FGR=[YR=2016] S1 E16 N8 E6 S2 E11 N36 W26 S15 E2 S8 E2 S6 W2 S6 W9 S6$ N6 W30 S6$ N6 E39 N6 E2 N6 W2 N8 W2 N22$ S7 E9 N7$ PTR= E30 FUS=[YR=2016] E11 N2 E5 S5 E16 FUS=[YR=2016] N11 E19 S11 W19$ E19 S14 FST=[YR=2018] S4 W19 N4 E19$ W19 S13 W13 N11 STR=[YR=2016] N8 E4 S8 W4$ E4 N8 W4 S7 W19 N18$ W30 $.

EXTRA FEATURES

LN	OB/XF CODE	DESCRIPTION	BLD	CAP	L	W	UNITS	UT	Adj R	ADJ UNIT PRICE	ORIG COND	YEAR ON	YEAR ACTUAL	Q	% COND	OB/XF MKT VALUE	NOTES
1	0812	CONCRETE C	0	0	0	0	2,356.00	SF	4.00	4.00	100	2016	2016	3	97	9,141	
2	0500	FP-PRE FAB	0	0	0	0	1.00	UT	3,500.00	3,500.00	100	2016	2016	3	98	3,430	
3	0462	ST/AL FNC	0	0	193	0	965.00	SF	10.00	10.00	100	2016	2016	3	84	8,106	

LAND DESCRIPTION

TOTAL OB/XF 20,677

LN	USE CODE	CLS	LAND USE DESCRIPTION	CAP	RD	LOC ZONE	FRONT	DEPTH	TOT LND UTS	UNIT TYPE	DT	DPTH FACT	% COND	TOT ADJ	UNIT PRICE	ADJ UNIT PRICE	LAND VALUE	OTHER ADJUSTMENTS AND NOTES	YEAR	DENSITY	DECL	FRZ	YR	CONSRV
1	000135	C	SFR CNSVTN	0		RS-1	0.00	0.00	1.00	LT		1.00	1.00	1.00	140,000.00	140,000.00	140,000							

REVIEW DATE 01/03/2019 BY KW Total Acres: 0.00 Total Land Value: 140,000 Market: 0 Agricultural: 0 Common: 140,000 PRINTED 08/02/2023 BY SYS