LOT 37
BRADY POINT PRESERVE PB 7/76

**HUGHES MARGARET L/E & HUGHES EDWARD N JR L/E/**
96002 BRADY POINT RD
FERNANDINA BEACH, FL 32034

# 2023

**38-2N-28-0180-0037-0000**

## NASSAU COUNTY PROPERTY



## BUILDING CHARACTERISTICS

| ELEMENT | CD | CONSTRUCTION |
|---|---|---|
| Exterior Wall | 17 | CB STUCCO 100 |
| Roof Structur | 08 | IRREGULAR 100 |
| Roof Cover | 08 | CLAY TILE 100 |
| Interior Wall | 05 | DRYWALL 100 |
| Interior Floo | 11 | CLAY TILE 50 |
| Interior Floo | 12 | HARDWOOD 50 |
| Air Condition | 03 | CENTRAL 100 |
| Heating Type | 04 | AIR DUCTED 100 |
| Bedrooms | | 3 100 |
| Bathrooms | | 3.5 100 |
| Frame | 03 | MASONRY 100 |
| Stories | 2.5 | 2.5 100 |
| Units | | 0 100 |
| Quality | 03 | Quality Level 03 |
| DOR CODE | 0100 | SINGLE FAMILY |
| MAP NUM | | MKT AREA 04 |
| NEIGHBORHOOD/LOC | 4014.00 | |

| AREA TYPE | TOTAL GROSS AREA | PCT OF BASE | TOT ADJ AREA | SUBAREA MARKET VALUE |
|---|---|---|---|---|
| BAS | 253 | 100 | 253 | 49,064 |
| FGR | 729 | 55 | 401 | 77,766 |
| FGR | 729 | 55 | 401 | 77,766 |
| FOP | 187 | 30 | 56 | 10,860 |
| FOP | 189 | 30 | 57 | 11,054 |
| FOP | 189 | 30 | 57 | 11,054 |
| FOP | 367 | 30 | 110 | 21,332 |
| FST | 36 | 55 | 20 | 3,878 |
| FST | 36 | 55 | 20 | 3,878 |
| FUS | 489 | 100 | 489 | 94,833 |
| TOTALS | 9,365 | | 7,468 | 1,448,280 |

## MARKET ADJUSTMENTS

| TYPE | MDL | EFF. AREA | TOT ADJ PTS | EFF. BASE RATE | REPL. COST NEW | AYB | EYB | ECON | FNCT | | NORM | % COND |
|---|---|---|---|---|---|---|---|---|---|---|---|---|
| 0500 | 11 | 7,468 | 144.7800 | 206.31 | 1,540,723 | 2010 | 2010 | 0 | 0 | 0 | 6.00 | 94.00 |

1 SFR CUST – 100% - 2020 Heated Area: 6297 HX Base Yr 2020

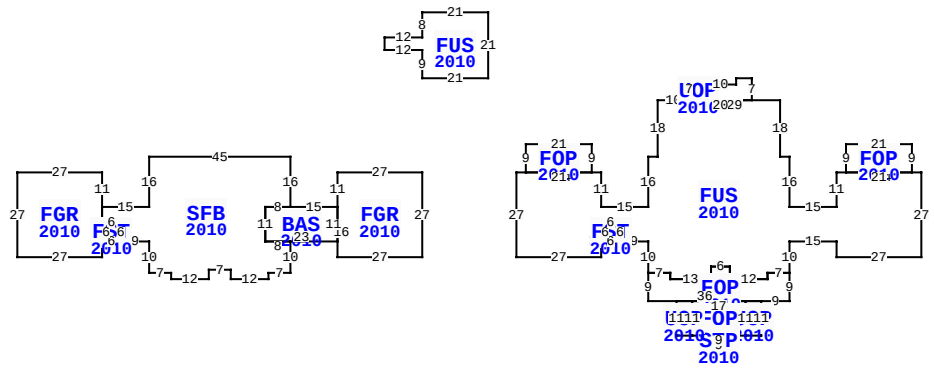


** This building has 16 Sub-Areas

96002 BRADY POINT RD, FERNANDINA BEACH

| | | | |
|---|---|---|---|
| BLD DATE | | LGL DATE | |
| XF DATE | | LAND DATE | 05/22/2023 MLU |
| INC DATE | | AG DATE | |

## NASSAU COUNTY PROPERTY — VALUATION SUMMARY

| | |
|---|---|
| VALUATION BY | STANDARD |
| Tax Group: 4 | Tax Dist: |
| BUILDING MARKET VALUE | 1,448,280 |
| TOTAL MARKET OB/XF VALUE | 145,773 |
| TOTAL LAND VALUE - MARKET | 375,000 |
| TOTAL MARKET VALUE | 1,969,053 |
| SOH/AGL Deduction | 364,268 |
| ASSESSED VALUE | 1,604,785 |
| TOTAL EXEMPTION VALUE | HX HB 50,000 |
| BASE TAXABLE VALUE | 1,554,785 |
| TOTAL JUST VALUE | 1,969,053 |
| NCON VALUE | 0 |
| INCOME VALUE | |
| PREVIOUS YEAR MKT VALUE | 1,952,441 |

| PERMIT NUM | DESCRIPTION | AMT | ISSUED |
|---|---|---|---|
| C21126 | CO ISSUED | 0 | 02/18/2010 |
| R12262 | REPAIR/RRF | 47,784 | 02/01/2010 |
| M14074 | MECH OTHER | 0 | 08/01/2008 |
| B21527 | SWIM POOL | 56,000 | 06/01/2008 |
| P13147 | OTHER | 0 | 04/01/2008 |
| B21126 | NEW CONSTR | 380,886 | 02/01/2008 |

## SALES DATA

| OFF RECORD Number | DATE | TYPE INST | Q / U | V / I | RSN CD | SALE PRICE |
|---|---|---|---|---|---|---|
| 2421/1159 | 12/20/2020 | SW | U | I | 11 | 100 |
| GRANTOR: HUGHES MARGARET J | | | | | | |
| GRANTEE: HUGHES MARGARET J I | | | | | | |
| 2421/1157 | 12/20/2020 | SW | U | I | 11 | 100 |
| GRANTOR: HUGHES EDWARD N | | | | | | |
| GRANTEE: HUGHES EDWARD N JR | | | | | | |

## BUILDING NOTES

## BUILDING DIMENSIONS

FGR=[YR=2010] W27 S11 BAS=[YR=2010] W15 SFB=[YR=2010] N16 W45 S16 W15 FGR=[YR=2010] N11 W27 S27 E27 N5 FST=[YR=2010] E6 N6 W6 S6 $ N11$ S5 E6 S6 E9 S10 E7 S2 E12 N3 E7 S3 E12 N2 E7 N10 W8 N11 E8 $ W8 S11 E23 N11 $ S16 E27 N27$ PTR=E30 FUS=[YR=2010] E3 FOP=[YR=2010] N9 E21 S9 W21 $ E24 S11 E15 N16 E3 N18 E10 UOP=[YR=2010] N7 E5 S2 E10 N2 E5 S7 W20$ E29 S18 E3 S16 E15 N11 E3 FOP=[YR=2010] N9 E21 S9 W21 $ E24 S27 W27 N5 W15 S10 FOP=[YR=2010] S9 W9 UOP=[YR=2010] S11 W5 FOP=[YR=2010] W4 STP=[YR=2010] S3 W9 N3 E9 $ W13 UOP=[YR=2010] W5 N11 E5 S11 $ N11 E17 S11 $ N11 E5 $ W36 N9 E7 S2 E13 N4 E6 S4 E12 N2 E7 $ W7 S2 W12 N4 W6 S4 W13 N2 W7 N10 W9 FST=[YR=2010] W6 N6 E6 S6 $ N6 W6 S11 W27 N27$W30$

## EXTRA FEATURES

| LN | OB/XF CODE | DESCRIPTION | BLD | CAP | L | W | UNITS | UT | Adj R | ADJ UNIT PRICE | ORIG COND | YEAR ON | YEAR ACTUAL | Q | % COND | OB/XF MKT VALUE | NOTES |
|---|---|---|---|---|---|---|---|---|---|---|---|---|---|---|---|---|---|
| 1 | 0855 | CONC PAVER | 0 | 100 | 0 | 0 | 9,006.00 | SF | 10.00 | 10.00 | 100 | 2010 | 2010 | 3 | 92 | 82,855 | |
| 2 | 0857 | SANDSTONE | 0 | 100 | 0 | 0 | 1,095.00 | SF | 16.00 | 16.00 | 100 | 2010 | 2010 | 3 | 98 | 17,170 | |
| 3 | 0861 | POOL GUNIT | 0 | 100 | 0 | 0 | 505.00 | SF | 85.00 | 85.00 | 100 | 2010 | 2010 | 3 | 64 | 27,472 | |
| 4 | 1242 | WD DECK A | 0 | 100 | 4 | 14 | 56.00 | SF | 10.00 | 10.00 | 100 | 2010 | 2010 | 3 | 50 | 280 | |
| 5 | 1242 | WD DECK A | 0 | 100 | 4 | 4 | 16.00 | SF | 10.00 | 10.00 | 100 | 2010 | 2010 | 3 | 50 | 80 | |
| 6 | 0600 | SUMMER KIT | 0 | 100 | 0 | 0 | 1.00 | UT | 7,500.00 | 7,500.00 | 100 | 2010 | 2010 | 3 | 50 | 3,750 | |
| 7 | 0462 | ST/AL FNC | 0 | 100 | 0 | 0 | 405.00 | SF | 10.00 | 10.00 | 100 | 2010 | 2010 | 3 | 64 | 2,592 | |
| 8 | 1123 | CB 8" | 0 | 100 | 0 | 0 | 1,350.00 | SF | 6.15 | 6.15 | 100 | 2010 | 2010 | 3 | 92 | 7,638 | |
| 9 | 0810 | CONCRETE A | 0 | 100 | 0 | 0 | 108.00 | SF | 6.50 | 6.50 | 100 | 2010 | 2010 | 3 | 92 | 646 | |
| 10 | 0500 | FP-PRE FAB | 0 | 100 | 0 | 0 | 1.00 | UT | 3,500.00 | 3,500.00 | 100 | 2010 | 2010 | 3 | 94 | 3,290 | |

TOTAL OB/XF 145,773

## LAND DESCRIPTION

| LN | USE CODE | CLS | LAND USE DESCRIPTION | CAP | RD | LOC ZONE | FRONT | DEPTH | TOT LND UTS | UNIT TYPE | DT | DPTH FACT | % COND | TOT ADJ | UNIT PRICE | ADJ UNIT PRICE | LAND VALUE | OTHER ADJUSTMENTS AND NOTES | YEAR | DENSITY | DECL | FRZ | YR | CONSRV |
|---|---|---|---|---|---|---|---|---|---|---|---|---|---|---|---|---|---|---|---|---|---|---|---|---|
| 1 | 000116 | C | SFR MARSH | 100 | 0003 | RS-1 | 0.00 | 0.00 | 1.00 | LT | | 1.00 | 1.00 | 1.00 | 375,000.00 | 375,000.00 | 375,000 | | | | | | | |

REVIEW DATE 03/01/2022 BY KWA Total Acres: 0.00 Total Land Value: 375,000 Market: 0 Agricultural: 0 Common: 375,000 PRINTED 08/02/2023 BY SYS