LOT 129
IN OR 1376/166
MEADOWFIELD #3 PB 6/321-323

TAYLOR RONALD J & MARILYN L
86795 RIVERWOOD DRIVE
YULEE, FL 32097

2023

38-2N-27-1332-0129-0000

BUILDING CHARACTERISTICS

ELEMENT	CD	CONSTRUCTION
Exterior Wall	16	WD FR STUC 100
Roof Structur	08	IRREGULAR 100
Roof Cover	03	COMP SHNGL 100
Interior Wall	05	DRYWALL 100
Interior Floo	14	CARPET 60
Interior Floo	11	CLAY TILE 40
Air Condition	03	CENTRAL 100
Heating Type	04	AIR DUCTED 100
Bedrooms		4 100
Bathrooms		3 100
Frame	02	WOOD FRAME 100
Stories	1.	1. 100
Units		0 100
Occupancy	00	NONE 100
Quality	02	Quality Level 02
DOR CODE	0100	SINGLE FAMILY
MAP NUM		MKT AREA 04
NEIGHBORHOOD/LOC	4045.00	

AREA TYPE	TOTAL GROSS AREA	PCT OF BASE	TOT ADJ AREA	SUBAREA MARKET VALUE
BAS	2,584	100	2,584	291,336
FGR	542	55	298	33,599
FOP	32	30	10	1,127
FSP	200	40	80	9,020
TOTALS	3,358		2,972	335,082

MARKET ADJUSTMENTS

TYPE	MDL	EFF. AREA	TOT ADJ PTS	EFF. BASE RATE	REPL. COST NEW	AYB	EYB	ECON	FNCT		NORM	% COND
0900	01	2,972	103.7666	123.22	366,210	2005	2005	0	0	0	8.50	91.50

1 SNGL FAM – 100% - 2006 Heated Area: 2584 HX Base Yr 2006

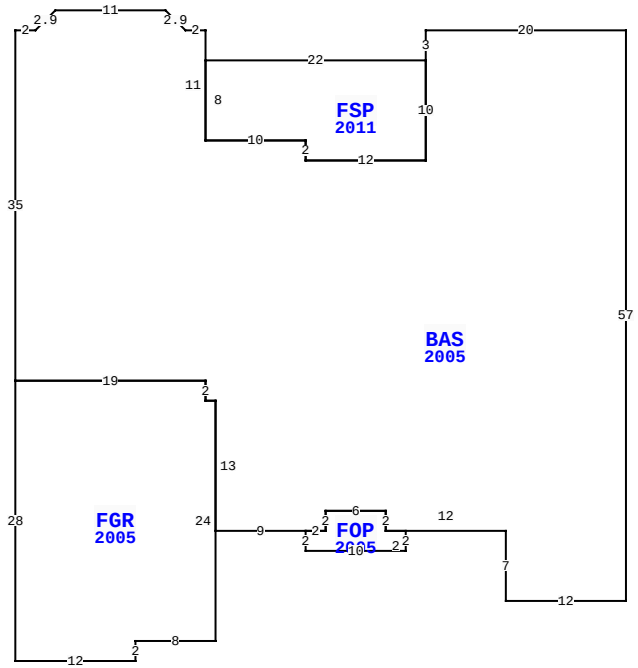

86795 RIVERWOOD DR, YULEE

BLD DATE	03/03/2023 NW	LGL DATE	
XF DATE		LAND DATE	
INC DATE		AG DATE	

NASSAU COUNTY PROPERTY

PAGE 1 of 1 4

VALUATION SUMMARY

VALUATION BY		STANDARD
Tax Group: 4	Tax Dist:	
BUILDING MARKET VALUE		335,082
TOTAL MARKET OB/XF VALUE		8,114
TOTAL LAND VALUE - MARKET		65,000
TOTAL MARKET VALUE		408,196
SOH/AGL Deduction		210,260
ASSESSED VALUE		197,936
TOTAL EXEMPTION VALUE	HX HB	50,000
BASE TAXABLE VALUE		147,936
TOTAL JUST VALUE		408,196
NCON VALUE		0
INCOME VALUE		
PREVIOUS YEAR MKT VALUE		321,781

PERMIT NUM	DESCRIPTION	AMT	ISSUED
B1631917	SCRNROOM	6,384	03/01/2016
B24517	XFOB	3,125	03/01/2011
M10307	MECH OTHER	0	09/01/2005
E15535	ELEC OTHER	2,000	08/01/2005
P0509568	OTHER	0	06/01/2005
R0507620	REPAIR/RRF	1,500	05/01/2005

SALES DATA

OFF RECORD Number	DATE	TYPE INST	Q / U	V / I	RSN CD	SALE PRICE
1376/0166	12/22/2005	WD	Q	I		260,600
GRANTOR: WATSON HOME BUILDERS						
GRANTEE: TAYLOR RONALD J & M						
1217/0139	3/22/2004	WD	U	V	19	494,000
GRANTOR: MEADOWFIELD JOINT VEN						
GRANTEE: WATSON HOME BUILDER						

BUILDING NOTES

BUILDING DIMENSIONS

BAS=[YR=2005] W20 S3 FSP=[YR=2011] W22 S8 E10 S2 E12 N10$ S10 W12 N2 W10 N11 W2 U2 L2 W11 D2 L2 W2 S35 FGR=[YR=2005] S28 E12 N2 E8 N24 W1 N2 W19$ E19 S2 E1 S13 E9 FOP=[YR=2005] S2 E10 N2 W2 N2 W6 S2 W2$ E2 N2 E6 S2 E12 S7 E12 N57 $.

EXTRA FEATURES

L N	OB/XF CODE	DESCRIPTION	BLD	CAP	L	W	UNITS	UT	Adj R	ADJ UNIT PRICE	ORIG COND	YEAR ON	YEAR ACTUAL	Q	% COND	OB/XF MKT VALUE	NOTES
1	0500	FP-PRE FAB	0	100	0	0	1.00	UT	3,500.00	3,500.00	100	2005	2005	3	90	3,150	
2	0811	CONCRETE B	0	100	0	0	777.00	SF	5.20	5.20	100	2005	2005	3	87	3,515	
3	0855	CONC PAVER	0	100	23	10	230.00	SF	7.00	7.00	100	2008	2008	3	90	1,449	

LAND DESCRIPTION

TOTAL OB/XF 8,114

L N	USE CODE	CLS	LAND USE DESCRIPTION	CAP	R D	LOC ZONE	FRONT	DEPTH	TOT LND UTS	UNIT TYPE	D T	DPTH FACT	% COND	TOT ADJ	UNIT PRICE	ADJ UNIT PRICE	LAND VALUE	OTHER ADJUSTMENTS AND NOTES	YEAR	DENSITY	DECL	FRZ	YR	CONSRV
1	000134	C	SFR POND	100		RS-1	0.00	0.00	1.00	LT		1.00	1.00	1.00	65,000.00	65,000.00	65,000							

REVIEW DATE 10/04/2018 BY SBA Total Acres: 0.00 Total Land Value: 65,000 Market: 0 Agricultural: 0 Common: 65,000 PRINTED 08/02/2023 BY SYS