LOT 57
IN OR 1403/1560
MEADOWFIELD #3 PB 6/321-323

MARTIN JACK C & KELLEY LYNN
86331 MEADOWWOOD DRIVE
YULEE, FL 32097

**2023**

**38-2N-27-1332-0057-0000**

## NASSAU COUNTY PROPERTY



## BUILDING CHARACTERISTICS

| ELEMENT | CD | CONSTRUCTION |
|---|---|---|
| Exterior Wall | 10 | ABOVE AVG 90 |
| Exterior Wall | 20 | FACE BRICK 10 |
| Roof Structur | 03 | GABLE/HIP 100 |
| Roof Cover | 03 | COMP SHNGL 100 |
| Interior Wall | 05 | DRYWALL 100 |
| Interior Floo | 14 | CARPET 70 |
| Interior Floo | 08 | SHT VINYL 30 |
| Air Condition | 03 | CENTRAL 100 |
| Heating Type | 04 | AIR DUCTED 100 |
| Bedrooms | | 5 100 |
| Bathrooms | | 3.5 100 |
| Frame | 02 | WOOD FRAME 100 |
| Stories | 1.5 | 1.5 100 |
| Units | | 0 100 |
| Occupancy | 00 | NONE 100 |
| Quality | 02 | Quality Level 02 |
| DOR CODE | 0100 | SINGLE FAMILY |
| MAP NUM | | MKT AREA 04 |
| NEIGHBORHOOD/LOC | 4045.00 | |

| AREA TYPE | TOTAL GROSS AREA | PCT OF BASE | TOT ADJ AREA | SUBAREA MARKET VALUE |
|---|---|---|---|---|
| BAS | 1,629 | 100 | 1,629 | 171,197 |
| FGR | 462 | 55 | 254 | 26,694 |
| FOP | 28 | 30 | 8 | 840 |
| FUS | 1,101 | 100 | 1,101 | 115,708 |
| PTO | 66 | 5 | 3 | 316 |
| UOP | 180 | 20 | 36 | 3,783 |
| TOTALS | 3,466 | | 3,031 | 318,538 |

## MARKET ADJUSTMENTS

| TYPE | MDL | EFF. AREA | TOT ADJ PTS | EFF. BASE RATE | REPL. COST NEW | AYB | EYB | ECON | FNCT | | NORM | % COND |
|---|---|---|---|---|---|---|---|---|---|---|---|---|
| 0900 | 01 | 3,031 | 96.1400 | 114.17 | 346,049 | 2006 | 2006 | 0 | 0 | 0 | 7.95 | 92.05 |

1 SNGL FAM – 100% - 2007 Heated Area: 2730 HX Base Yr 2007

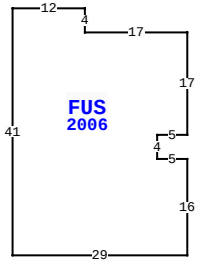


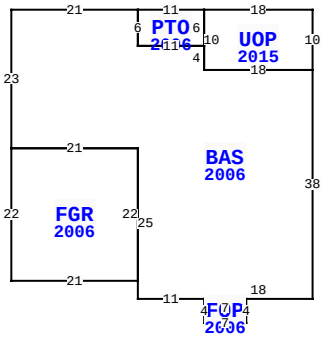


86331 MEADOWWOOD DR, YULEE

| | | | |
|---|---|---|---|
| BLD DATE | 03/03/2023 NW | LGL DATE | |
| XF DATE | | LAND DATE | |
| INC DATE | | AG DATE | |

## VALUATION SUMMARY

| | | |
|---|---|---|
| VALUATION BY | | STANDARD |
| Tax Group: 4 | Tax Dist: | |
| BUILDING MARKET VALUE | | 318,538 |
| TOTAL MARKET OB/XF VALUE | | 44,609 |
| TOTAL LAND VALUE - MARKET | | 65,000 |
| TOTAL MARKET VALUE | | 428,147 |
| SOH/AGL Deduction | | 212,760 |
| ASSESSED VALUE | | 215,387 |
| TOTAL EXEMPTION VALUE | HX HB | 50,000 |
| BASE TAXABLE VALUE | | 165,387 |
| TOTAL JUST VALUE | | 428,147 |
| NCON VALUE | | 0 |
| INCOME VALUE | | |
| PREVIOUS YEAR MKT VALUE | | 333,938 |

| PERMIT NUM | DESCRIPTION | AMT | ISSUED |
|---|---|---|---|
| B1530375 | SWIM POOL | 35,400 | 05/01/2015 |
| E16230 | ELEC OTHER | 2,000 | 11/01/2005 |
| M10667 | MECH OTHER | 0 | 11/01/2005 |
| C15819 | CO ISSUED | 186,073 | 08/01/2005 |
| P09934 | OTHER | 0 | 08/01/2005 |
| R08067 | REPAIR/RRF | 1,500 | 08/01/2005 |

## SALES DATA

| OFF RECORD Number | DATE | TYPE INST | Q / U | V / I | RSN CD | SALE PRICE |
|---|---|---|---|---|---|---|
| 1403/1560 | 4/12/2006 | WD | Q | I | | 255,600 |
| GRANTOR: WATSON HOME BUILDERS | | | | | | |
| GRANTEE: MARTIN JACK C & KEL | | | | | | |
| 1242/0974 | 7/01/2004 | WD | U | V | 19 | 532,000 |
| GRANTOR: MEADOWFIELD JOINT VEN | | | | | | |
| GRANTEE: WATSON HOME BUILDER | | | | | | |

## BUILDING NOTES

## BUILDING DIMENSIONS

UOP=[YR=2015] W18 PTO=[YR=2006] W11 BAS=[YR=2006] W21 S23 FGR=[YR=2006] S22 E21 N22 W21$ E21 S25 E11 FOP=[YR=2006] S4 E7 N4 W7$ E18 N38 W18 N4 W11 N6$ S6 E11 N6$ S10 E18 N10$ PTR=N15 FUS=[YR=2006] N41 E12 S4 E17 S17 W5 S4 E5 S16 W29$ S15$.

## EXTRA FEATURES

| LN | OB/XF CODE | DESCRIPTION | BLD | CAP | L | W | UNITS | UT | Adj R | ADJ UNIT PRICE | ORIG COND | YEAR ON | YEAR ACTUAL | Q | % COND | OB/XF MKT VALUE | NOTES |
|---|---|---|---|---|---|---|---|---|---|---|---|---|---|---|---|---|---|
| 1 | 0504 | FP-ELECTRI | 0 | 100 | 0 | 0 | 1.00 | UT | 2,000.00 | 2,000.00 | 100 | 2006 | 2006 | 3 | 91 | 1,820 | |
| 2 | 0811 | CONCRETE B | 0 | 100 | 0 | 0 | 952.00 | SF | 5.20 | 5.20 | 100 | 2006 | 2006 | 3 | 88 | 4,356 | |
| 3 | 0861 | POOL GUNIT | 0 | 100 | 30 | 15 | 450.00 | SF | 85.00 | 85.00 | 100 | 2015 | 2015 | 3 | 81 | 30,983 | |
| 4 | 0855 | CONC PAVER | 0 | 100 | 0 | 0 | 743.00 | SF | 10.00 | 10.00 | 100 | 2015 | 2015 | 3 | 96 | 7,133 | |
| 5 | 1076 | TRELLIS A | 0 | 100 | 11 | 6 | 66.00 | SF | 7.50 | 7.50 | 100 | 2010 | 2010 | 3 | 64 | 317 | |

## LAND DESCRIPTION

TOTAL OB/XF 44,609

| LN | USE CODE | CLS | LAND USE DESCRIPTION | CAP | RD | LOC ZONE | FRONT | DEPTH | TOT LND UTS | UNIT TYPE | DT | DPTH FACT | % COND | TOT ADJ | UNIT PRICE | ADJ UNIT PRICE | LAND VALUE | OTHER ADJUSTMENTS AND NOTES | YEAR | DENSITY | DECL | FRZ | YR | CONSRV |
|---|---|---|---|---|---|---|---|---|---|---|---|---|---|---|---|---|---|---|---|---|---|---|---|---|
| 1 | 000100 | C | SFR | 100 | | RS-1 | 0.00 | 0.00 | 1.00 | LT | | 1.00 | 1.00 | 1.00 | 65,000.00 | 65,000.00 | 65,000 | | | | | | | |

REVIEW DATE 08/05/2020 BY NWA Total Acres: 0.00 Total Land Value: 65,000 Market: 0 Agricultural: 0 Common: 65,000 PRINTED 08/02/2023 BY SYS