LOT 42
IN OR 1951/1602
MEADOWFIELD #3 PB 6/321-323

CALTAGIRONE MARK A & DEBBIE
86589 MEADOWWOOD DR
YULEE, FL 32097

2023

38-2N-27-1332-0042-0000

NASSAU COUNTY PROPERTY

BUILDING CHARACTERISTICS

ELEMENT	CD	CONSTRUCTION
Exterior Wall	16	WD FR STUC 100
Roof Structur	08	IRREGULAR 100
Roof Cover	03	COMP SHNGL 100
Interior Wall	05	DRYWALL 100
Interior Floo	14	CARPET 70
Interior Floo	08	SHT VINYL 30
Air Condition	03	CENTRAL 100
Heating Type	04	AIR DUCTED 100
Bedrooms		5 100
Bathrooms		3.5 100
Frame	02	WOOD FRAME 100
Stories	2.	2. 100
Units		0 100
Occupancy	00	NONE 100
Quality	02	Quality Level 02

DOR CODE 0100 SINGLE FAMILY
MAP NUM | MKT AREA 04
NEIGHBORHOOD/LOC 4045.00

AREA TYPE	TOTAL GROSS AREA	PCT OF BASE	TOT ADJ AREA	SUBAREA MARKET VALUE
BAS	1,316	100	1,316	139,475
FGR	498	55	274	29,040
FOP	50	30	15	1,590
FOP	120	30	36	3,815
FUS	1,584	100	1,584	167,879
TOTALS	3,568		3,225	341,798

MARKET ADJUSTMENTS

TYPE	MDL	EFF. AREA	TOT ADJ PTS	EFF. BASE RATE	REPL. COST NEW	AYB	EYB	ECON	FNCT		NORM	% COND
0900	01	3,225	97.0140	115.20	371,520	2006	2006	0	0	0	8.00	92.00

1 SNGL FAM – 100% - 2019 Heated Area: 2900 HX Base Yr

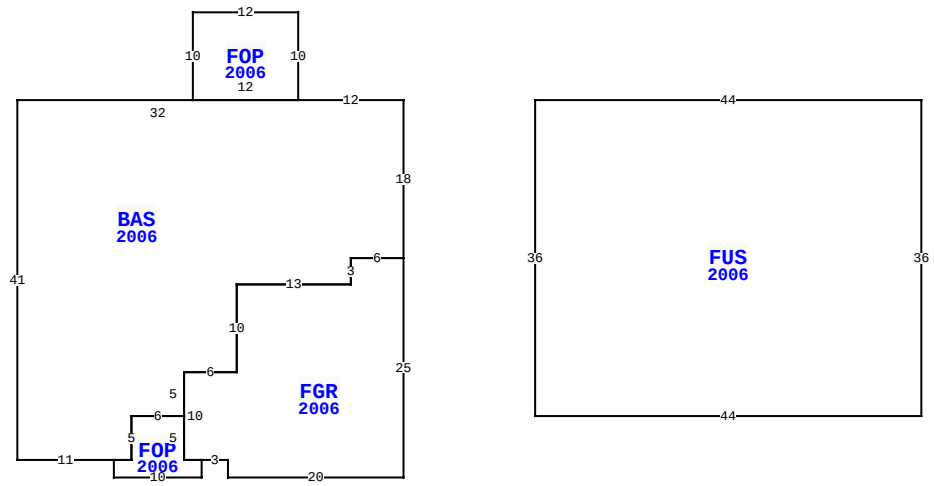

86589 MEADOWWOOD DR, YULEE

BLD DATE	03/03/2023 NW	LGL DATE	
XF DATE		LAND DATE	
INC DATE		AG DATE	

NASSAU COUNTY PROPERTY — VALUATION SUMMARY

VALUATION BY		STANDARD
Tax Group: 4	Tax Dist:	
BUILDING MARKET VALUE		341,798
TOTAL MARKET OB/XF VALUE		5,389
TOTAL LAND VALUE - MARKET		65,000
TOTAL MARKET VALUE		412,187
SOH/AGL Deduction		0
ASSESSED VALUE		412,187
TOTAL EXEMPTION VALUE	13	412,187
BASE TAXABLE VALUE		0
TOTAL JUST VALUE		412,187
NCON VALUE		0
INCOME VALUE		
PREVIOUS YEAR MKT VALUE		322,376

PERMIT NUM	DESCRIPTION	AMT	ISSUED
M10877	MECH OTHER	0	01/01/2006
C16483	CO ISSUED	230,264	11/01/2005
B16483	NEW CONSTR	230,264	11/01/2005
E16219	ELEC OTHER	2,000	11/01/2005
P10370	OTHER	0	11/01/2005
R08505	REPAIR/RRF	4,030	11/01/2005

SALES DATA

OFF RECORD Number	DATE	TYPE INST	Q / U	V / I	RSN CD	SALE PRICE
1951/1602	11/14/2014	WD	Q	I	01	190,000
GRANTOR: ADAMS DIONE M ET AL						
GRANTEE: CALTAGIRONE MARK A						
1401/1498	4/05/2006	WD	Q	I		279,400
GRANTOR: PROVIDENCE CONSTRUCTI						
GRANTEE: ADAMS DION M & ELIE						

BUILDING NOTES

BUILDING DIMENSIONS

BAS=[YR=2006] W12 FOP=[YR=2006] N10 W12 S10 E12$ W32 S41 E11 FOP=[YR=2006] S2 E10 N2 FGR=[YR=2006] E3 S2 E20 N25 W6 S3 W13 S10 W6 S10 E2$ W2 N5 W6 S5 W2$ E2 N5 E6 N5 E6 N10 E13 N3 E6 N18$ PTR=E15 FUS=[YR=2006] E44 S36 W44 N36$ W15$.

EXTRA FEATURES

LN	OB/XF CODE	DESCRIPTION	BLD	CAP	L	W	UNITS	UT	Adj R	ADJ UNIT PRICE	ORIG COND	YEAR ON	YEAR ACTUAL	Q	% COND	OB/XF MKT VALUE	NOTES
1	0504	FP-ELECTRI	0	100	0	0	1.00	UT	2,000.00	2,000.00	100	2006	2006	3	91	1,820	
2	0811	CONCRETE B	0	100	0	0	780.00	SF	5.20	5.20	100	2006	2006	3	88	3,569	

LAND DESCRIPTION

TOTAL OB/XF 5,389

LN	USE CODE	CLS	LAND USE DESCRIPTION	CAP	RD	LOC ZONE	FRONT	DEPTH	TOT LND UTS	UNIT TYPE	DT	DPTH FACT	% COND	TOT ADJ	UNIT PRICE	ADJ UNIT PRICE	LAND VALUE	OTHER ADJUSTMENTS AND NOTES	YEAR	DENSITY	DECL	FRZ	YR	CONSRV
1	000100	C	SFR	100		RS-1	0.00	0.00	1.00	LT		1.00	1.00	1.00	65,000.00	65,000.00	65,000							

REVIEW DATE 10/04/2018 BY SBA Total Acres: 0.00 Total Land Value: 65,000 Market: 0 Agricultural: 0 Common: 65,000 PRINTED 08/02/2023 BY SYS