LOT 29
IN OR 1766/856
MEADOWFIELD UNIT 1B PB 6/203

SHERWOOD SCOTT A
86273 FIELDSTONE DRIVE
YULEE, FL 32097

2023

38-2N-27-1331-0029-0000

BUILDING CHARACTERISTICS

ELEMENT	CD	CONSTRUCTION
Exterior Wall	10	ABOVE AVG 70
Exterior Wall	16	WD FR STUC 30
Roof Structur	03	GABLE/HIP 100
Roof Cover	03	COMP SHNGL 100
Interior Wall	05	DRYWALL 100
Interior Floo	14	CARPET 80
Interior Floo	08	SHT VINYL 20
Air Condition	03	CENTRAL 100
Heating Type	04	AIR DUCTED 100
Bedrooms		4 100
Bathrooms		3 100
Frame	02	WOOD FRAME 100
Stories	2.	2. 100
Units		0 100
Occupancy	00	NONE 100
Quality	02	Quality Level 02
DOR CODE	0100	SINGLE FAMILY
MAP NUM		MKT AREA 04
NEIGHBORHOOD/LOC	4045.00	

AREA TYPE	TOTAL GROSS AREA	PCT OF BASE	TOT ADJ AREA	SUBAREA MARKET VALUE
BAS	1,692	100	1,692	182,117
FGR	486	55	267	28,739
FOP	43	30	13	1,400
FUS	693	100	693	74,590
PTO	154	5	8	861
TOTALS	3,068		2,673	287,705

MARKET ADJUSTMENTS

TYPE	MDL	EFF. AREA	TOT ADJ PTS	EFF. BASE RATE	REPL. COST NEW	AYB	EYB	ECON	FNCT		NORM	% COND
0900	01	2,673	100.3200	119.13	318,434	2002	2002	0	0	0	9.65	90.35

1 SNGL FAM – 100% - 2003 Heated Area: 2385 HX Base Yr 2003

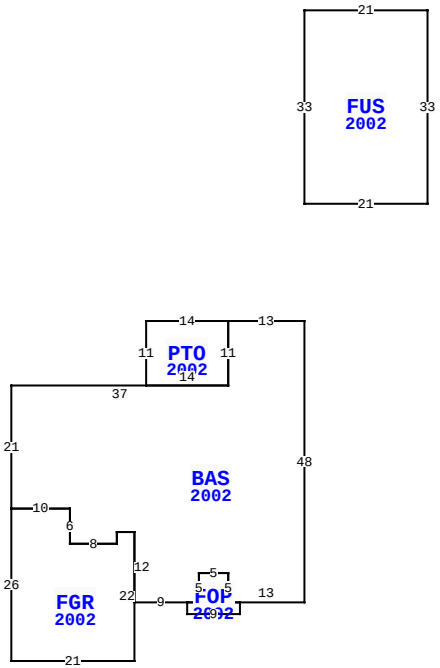

86273 FIELDSTONE DR, YULEE

BLD DATE	03/03/2023 NW	LGL DATE	
XF DATE		LAND DATE	
INC DATE		AG DATE	

NASSAU COUNTY PROPERTY

PAGE 1 of 1 4

VALUATION SUMMARY

VALUATION BY		STANDARD
Tax Group: 4	Tax Dist:	
BUILDING MARKET VALUE		287,705
TOTAL MARKET OB/XF VALUE		6,723
TOTAL LAND VALUE - MARKET		65,000
TOTAL MARKET VALUE		359,428
SOH/AGL Deduction		180,076
ASSESSED VALUE		179,352
TOTAL EXEMPTION VALUE	HX HB	50,000
BASE TAXABLE VALUE		129,352
TOTAL JUST VALUE		359,428
NCON VALUE		0
INCOME VALUE		
PREVIOUS YEAR MKT VALUE		282,618

PERMIT NUM	DESCRIPTION	AMT	ISSUED
17003506	REPAIR/RRF	16,633	04/20/2017
B0209265	NEW CONSTR	149,054	01/01/2002

SALES DATA

OFF RECORD Number	DATE	TYPE INST	Q U	V I	RSN CD	SALE PRICE
1766/0856	10/22/2010	QC	U	I	11	100
GRANTOR: SHERWOOD SCOTT A & WE						
GRANTEE: SHERWOOD SCOTT A						
1067/1946	7/11/2002	WD	Q	I		134,900
GRANTOR: ATLANTIC BUILDERS INC						
GRANTEE: SHERWOOD SCOTT A &						

BUILDING NOTES

BUILDING DIMENSIONS

BAS=[YR=2002] W13 PTO=[YR=2002] W14 S11 E14 N11$ S11 W37 S21 FGR=[YR=2002] S26 E21 N22 W3 S2 W8 N6 W10$ E10 S6 E8 N2 E3 S12 E9 FOP=[YR=2002] S2 E9 N2 W2 N5 W5 S5 W2$ E2 N5 E5 S5E13 N48$ PTR= N20FUS=[YR=2002] N33 E21 S33 W21$ S20$.

EXTRA FEATURES

LN	OB/XF CODE	DESCRIPTION	BLD	CAP	L	W	UNITS	UT	Adj R	ADJ UNIT PRICE	ORIG COND	YEAR ON	YEAR ACTUAL	Q	% COND	OB/XF MKT VALUE	NOTES
1	0811	CONCRETE B	0	100	0	0	846.00	SF	5.20	5.20	100	2002	2002	3	83	3,651	
2	0471	VINYL FNC	0	100	0	0	150.00	LF	32.00	32.00	100	2003	2003	3	64	3,072	

LAND DESCRIPTION

TOTAL OB/XF 6,723

LN	USE CODE	CLS	LAND USE DESCRIPTION	CAP	RD	LOC ZONE	FRONT	DEPTH	TOT LND UTS	UNIT TYPE	DT	DPTH FACT	% COND	TOT ADJ	UNIT PRICE	ADJ UNIT PRICE	LAND VALUE	OTHER ADJUSTMENTS AND NOTES	YEAR	DENSITY	DECL	FRZ	YR	CONSRV
1	000100	C	SFR	100			0.00	0.00	1.00	LT		1.00	1.00	1.00	65,000.00	65,000.00	65,000							

REVIEW DATE 05/20/2019 BY KWX Total Acres: 0.00 Total Land Value: 65,000 Market: 0 Agricultural: 0 Common: 65,000 PRINTED 08/02/2023 BY SYS