LOT 19
IN OR 1558/1642
MEADOWFIELD UNIT 1-A PB 6/148

PICKLER JUSTIN F & DELEAH
86028 CREEKWOOD DR
YULEE, FL 32097

2023

38-2N-27-1331-0019-0000

BUILDING CHARACTERISTICS

ELEMENT	CD	CONSTRUCTION
Exterior Wall	10	ABOVE AVG 80
Exterior Wall	16	WD FR STUC 20
Roof Structur	03	GABLE/HIP 100
Roof Cover	03	COMP SHNGL 100
Interior Wall	05	DRYWALL 100
Interior Floo	14	CARPET 80
Interior Floo	08	SHT VINYL 20
Air Condition	03	CENTRAL 100
Heating Type	04	AIR DUCTED 100
Bedrooms		3 100
Bathrooms		2 100
Frame	02	WOOD FRAME 100
Stories	1.	1. 100
Units		0 100
Occupancy	00	NONE 100
Quality	02	Quality Level 02
DOR CODE	0100	SINGLE FAMILY
MAP NUM		MKT AREA 04
NEIGHBORHOOD/LOC	4045.00	

AREA TYPE	TOTAL GROSS AREA	PCT OF BASE	TOT ADJ AREA	SUBAREA MARKET VALUE
BAS	2,219	100	2,219	229,881
FGR	533	55	293	30,354
FOP	60	30	18	1,865
FSP	180	40	72	7,459
TOTALS	2,992		2,602	269,559

MARKET ADJUSTMENTS

TYPE	MDL	EFF. AREA	TOT ADJ PTS	EFF. BASE RATE	REPL. COST NEW	AYB	EYB	ECON	FNCT		NORM	% COND
0900	01	2,602	97.5840	115.88	301,520	2000	2000	0	0	0	10.60	89.40

1 SNGL FAM – 100% - 2009 Heated Area: 2219 HX Base Yr 2009

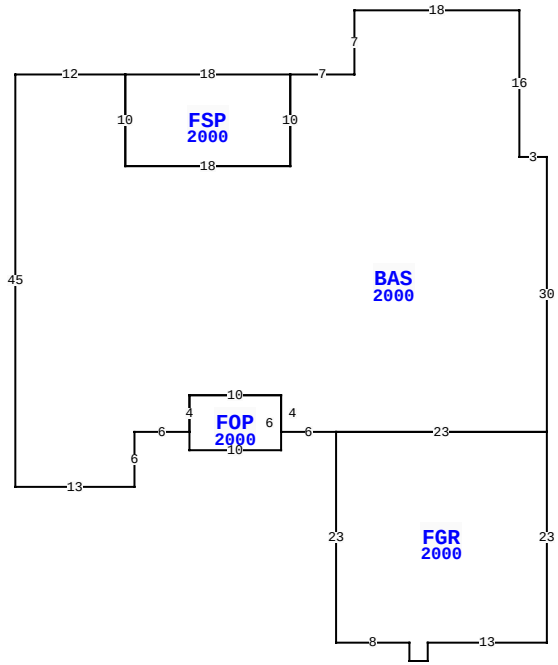

86028 CREEKWOOD DR, YULEE

BLD DATE	03/03/2023 NW	LGL DATE	
XF DATE		LAND DATE	
INC DATE		AG DATE	

NASSAU COUNTY PROPERTY

PAGE 1 of 1 4

VALUATION SUMMARY

VALUATION BY		STANDARD
Tax Group: 4	Tax Dist:	
BUILDING MARKET VALUE		269,559
TOTAL MARKET OB/XF VALUE		5,154
TOTAL LAND VALUE - MARKET		65,000
TOTAL MARKET VALUE		339,713
SOH/AGL Deduction		170,504
ASSESSED VALUE		169,209
TOTAL EXEMPTION VALUE	HX HB VX	55,000
BASE TAXABLE VALUE		114,209
TOTAL JUST VALUE		339,713
NCON VALUE		0
INCOME VALUE		
PREVIOUS YEAR MKT VALUE		267,982

PERMIT NUM	DESCRIPTION	AMT	ISSUED
B07476	NEW CONSTR	121,476	08/01/2000

SALES DATA

OFF RECORD Number	DATE	TYPE INST	Q U /	V I /	RSN CD	SALE PRICE
1558/1642	4/01/2008	WD	Q	I		228,000
GRANTOR: HAIGH JAMES E & ROBIN						
GRANTEE: PICKLER JUSTIN F &						
1065/1723	6/28/2002	WD	Q	I		185,000
GRANTOR: JONES DEREK A & ANGEL						
GRANTEE: HAIGH JAMES E & ROB						

BUILDING NOTES

BUILDING DIMENSIONS

BAS=[YR=2000] W18 S7 W7 FSP=[YR=2000] W18 S10 E18 N10$ S10 W18 N10 W12 S45 E13 N6 E6 FOP=[YR=2000] S2 E10 N6 W10 S4$ N4 E10 S4 E6 FGR=[YR=2000] S23 E8 S2 E2 N2 E13 N23 W23$ E23 N30 W3 N16$.

EXTRA FEATURES

LN	OB/XF CODE	DESCRIPTION	BLD	CAP	L	W	UNITS	UT	Adj R	ADJ UNIT PRICE	ORIG COND	YEAR ON	YEAR ACTUAL	Q	% COND	OB/XF MKT VALUE	NOTES
1	0811	CONCRETE B	0	100	0	0	1,239.00	SF	5.20	5.20	100	2000	2000	3	80	5,154	

LAND DESCRIPTION

TOTAL OB/XF 5,154

LN	USE CODE	CLS	LAND USE DESCRIPTION	CAP	RD	LOC ZONE	FRONT	DEPTH	TOT LND UTS	UNIT TYPE	DT	DPTH FACT	% COND	TOT ADJ	UNIT PRICE	ADJ UNIT PRICE	LAND VALUE	OTHER ADJUSTMENTS AND NOTES	YEAR	DENSITY	DECL	FRZ	YR	CONSRV
1	000100	C	SFR	100			0.00	0.00	1.00	LT		1.00	1.00	1.00	65,000.00	65,000.00	65,000							

REVIEW DATE 09/21/2018 BY SBX Total Acres: 0.00 Total Land Value: 65,000 Market: 0 Agricultural: 0 Common: 65,000 PRINTED 08/02/2023 BY SYS