LOT 25
MEADOWFIELD BLUFFS PB 5/105

MORGAN JULIE ANN & TERRILL LYNN
86279 MEADOWFIELD BLUFF RD
YULEE, FL 32097

2023

38-2N-27-1330-0025-0000

NASSAU COUNTY PROPERTY

BUILDING CHARACTERISTICS

ELEMENT	CD	CONSTRUCTION
Exterior Wall	20	FACE BRICK 100
Roof Structur	08	IRREGULAR 100
Roof Cover	03	COMP SHNGL 100
Interior Wall	05	DRYWALL 100
Interior Floo	12	HARDWOOD 80
Interior Floo	11	CLAY TILE 20
Air Condition	03	CENTRAL 100
Heating Type	04	AIR DUCTED 100
Bedrooms		4 100
Bathrooms		2.5 100
Frame	02	WOOD FRAME 100
Stories	2.	2. 100
Units		0 100
Occupancy	00	NONE 100
Quality	02	Quality Level 02

DOR CODE 0100 SINGLE FAMILY
MAP NUM | MKT AREA 04
NEIGHBORHOOD/LOC 4056.00

AREA TYPE	TOTAL GROSS AREA	PCT OF BASE	TOT ADJ AREA	SUBAREA MARKET VALUE
BAS	1,901	100	1,901	190,493
FGR	484	55	266	26,655
FOP	114	30	34	3,407
FOP	390	30	117	11,724
FUS	1,084	100	1,084	108,624
TOTALS	3,973		3,402	340,904

MARKET ADJUSTMENTS

TYPE	MDL	EFF. AREA	TOT ADJ PTS	EFF. BASE RATE	REPL. COST NEW	AYB	EYB	ECON	FNCT		NORM	% COND
0900	01	3,402	100.1604	118.94	404,634	1993	2001	0	0	0	15.75	84.25

1 SNGL FAM – 100% - 2021 Heated Area: 2985 HX Base Yr 2021

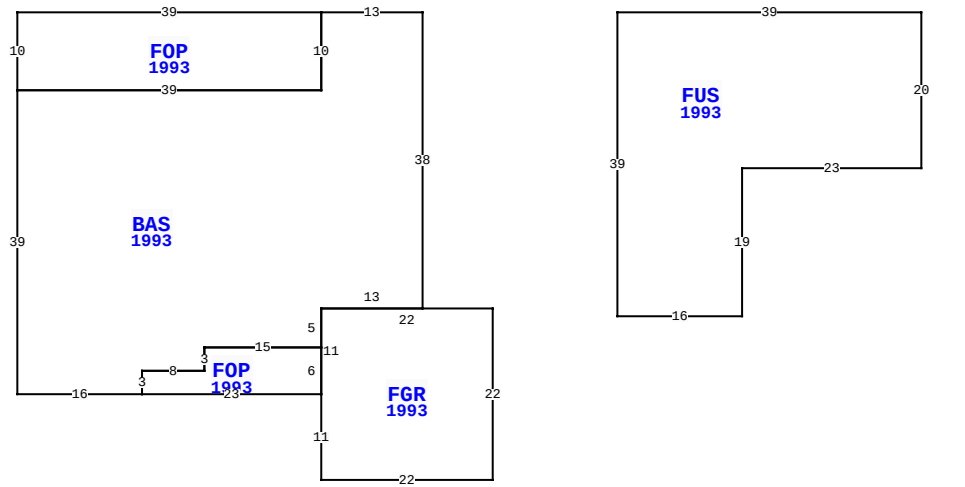

86279 MEADOWFIELD BLUFFS RD, YULEE

BLD DATE		LGL DATE	
XF DATE		LAND DATE	
INC DATE		AG DATE	

VALUATION SUMMARY

VALUATION BY		STANDARD
Tax Group: 4	Tax Dist:	
BUILDING MARKET VALUE		347,149
TOTAL MARKET OB/XF VALUE		25,148
TOTAL LAND VALUE - MARKET		200,000
TOTAL MARKET VALUE		572,297
SOH/AGL Deduction		69,357
ASSESSED VALUE		502,940
TOTAL EXEMPTION VALUE	HX HB	50,000
BASE TAXABLE VALUE		452,940
TOTAL JUST VALUE		572,297
NCON VALUE		0
INCOME VALUE		
PREVIOUS YEAR MKT VALUE		516,467

PERMIT NUM	DESCRIPTION	AMT	ISSUED
17008307	REPAIR/RRF	13,524	09/20/2017
B25651	REMODEL	4,582	02/01/2012
B0310970	XFOB	19,000	04/01/2003
B0209187	GARAGE	10,000	01/01/2002
139	NEW CONSTR	155,670	04/01/1993

SALES DATA

OFF RECORD Number	DATE	TYPE INST	Q / U	V / I	RSN CD	SALE PRICE
2357/0299	4/27/2020	WD	Q	I	01	590,000
GRANTOR: STOREY STANLEY L & M						
GRANTEE: MORGAN JULIE ANN &						
0553/0820	9/30/1988	WD	Q	V		50,000
GRANTOR: MEADOWFIELD BLUFFS						
GRANTEE: STOREY STANLEY L						

BUILDING NOTES

BUILDING DIMENSIONS

BAS=[YR=1993] W13 FOP=[YR=1993] W39 S10 E39 N10$ S10 W39 S39 E16 FOP=[YR=1993] E23 FGR=[YR=1993] S11 E22 N22 W22 S11$ N6 W15 S3 W8 S3$ N3 E8 N3 E15 N5 E13 N38$PTR= E25 FUS=[YR=1993] E39 S20 W23 S19 W16 N39$ W25$.

EXTRA FEATURES

LN	OB/XF CODE	DESCRIPTION	BLD	CAP	L	W	UNITS	UT	Adj R	ADJ UNIT PRICE	ORIG COND	YEAR ON	YEAR ACTUAL	Q	% COND	OB/XF MKT VALUE	NOTES
1	0810	CONCRETE A	0	100	0	0	567.00	SF	6.50	6.50	100	1996	1996	3	73	2,690	
2	0810	CONCRETE A	0	100	0	0	1,637.00	SF	6.50	6.50	100	1996	1996	3	73	7,768	
4	0500	FP-PRE FAB	0	100	0	0	1.00	UT	3,500.00	3,500.00	100	1993	1993	3	76	2,660	
5	0300	BOAT DCK W	0	100	0	0	276.00	SF	40.00	40.00	100	1996	1996	3	25	2,760	
6	0825	BRICK	0	100	10	6	60.00	SF	12.50	12.50	100	1996	1996	3	92	690	
7	0920	CWALL-WD/M	0	100	0	0	110.00	LF	390.00	390.00	100	1996	1996	3	20	8,580	

LAND DESCRIPTION

TOTAL OB/XF 25,148

LN	USE CODE	CLS	LAND USE DESCRIPTION	CAP	RD	LOC ZONE	FRONT	DEPTH	TOT LND UTS	UNIT TYPE	DT	DPTH FACT	% COND	TOT ADJ	UNIT PRICE	ADJ UNIT PRICE	LAND VALUE	OTHER ADJUSTMENTS AND NOTES	YEAR	DENSITY	DECL	FRZ	YR	CONSRV
1	000130	C	SFR WATER	100	0006	RS-1	0.00	0.00	1.00	LT		1.00	1.00	1.00	200,000.00	200,000.00	200,000							

REVIEW DATE 09/26/2018 BY SBX Total Acres: 0.00 Total Land Value: 200,000 Market: 0 Agricultural: 0 Common: 200,000 PRINTED 08/02/2023 BY SYS

LOT 25
MEADOWFIELD BLUFFS PB 5/105

MORGAN JULIE ANN & TERRILL LYNN
86279 MEADOWFIELD BLUFF RD
YULEE, FL 32097

2023

38-2N-27-1330-0025-0000

NASSAU COUNTY PROPERTY

BUILDING CHARACTERISTICS

ELEMENT	CD	CONSTRUCTION
Exterior Wall	19	COMMON BRK 100
Roof Structur	03	GABLE/HIP 100
Roof Cover	03	COMP SHNGL 100
Interior Wall	02	WALL BD/WD 100
Interior Floo	03	CONC FINSH 100
Air Condition	01	NONE 100
Heating Type	01	NONE 100
Bedrooms		0 100
Bathrooms		0 100
Frame	02	WOOD FRAME 100
Stories	1.	1. 100
Units		0 100
Occupancy	00	NONE 100
Quality	04	Quality Level 04

DOR CODE	0100	SINGLE FAMILY	
MAP NUM		MKT AREA	04
NEIGHBORHOOD/LOC	4056.00		

AREA TYPE	TOTAL GROSS AREA	PCT OF BASE	TOT ADJ AREA	SUBAREA MARKET VALUE
BAS	289	100	289	6,097
UOP	36	20	7	148
TOTALS	325		296	6,245

MARKET ADJUSTMENTS

TYPE	MDL	EFF. AREA	TOT ADJ PTS	EFF. BASE RATE	REPL. COST NEW	AYB	EYB	ECON	FNCT		NORM	% COND
6500	01	296	86.1000	30.14	8,921	2002	2002	0	0	0	30.00	70.00

2 GARAGE RES – 100% - 2021 Heated Area: 289 HX Base Yr 2021

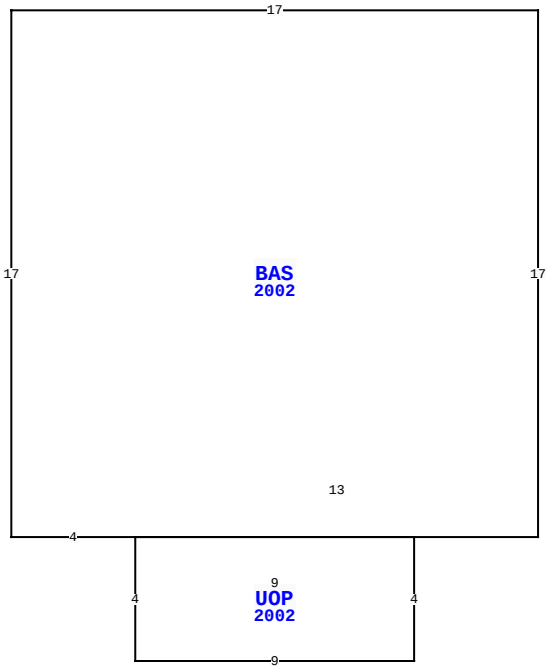

86279 MEADOWFIELD BLUFFS RD, YULEE

BLD DATE		LGL DATE	
XF DATE		LAND DATE	
INC DATE		AG DATE	

VALUATION SUMMARY

VALUATION BY		STANDARD
Tax Group: 4	Tax Dist:	
BUILDING MARKET VALUE		347,149
TOTAL MARKET OB/XF VALUE		25,148
TOTAL LAND VALUE - MARKET		200,000
TOTAL MARKET VALUE		572,297
SOH/AGL Deduction		69,357
ASSESSED VALUE		502,940
TOTAL EXEMPTION VALUE	HX HB	50,000
BASE TAXABLE VALUE		452,940
TOTAL JUST VALUE		572,297
NCON VALUE		0
INCOME VALUE		
PREVIOUS YEAR MKT VALUE		516,467

PERMIT NUM	DESCRIPTION	AMT	ISSUED

SALES DATA

OFF RECORD Number	DATE	TYPE INST	Q U /	V I /	RSN CD	SALE PRICE
2357/0299	4/27/2020	WD	Q	I	01	590,000
GRANTOR: STOREY STANLEY L & M						
GRANTEE: MORGAN JULIE ANN &						
0553/0820	9/30/1988	WD	Q	V		50,000
GRANTOR: MEADOWFIELD BLUFFS						
GRANTEE: STOREY STANLEY L						

BUILDING NOTES

BUILDING DIMENSIONS

BAS=[YR=2002] W17 S17 E4 UOP=[YR=2002] S4 E9 N4 W9$ E13 N17$
.

EXTRA FEATURES

L N	OB/XF CODE	DESCRIPTION	BLD	CAP	L	W	UNITS	UT	Adj R	ADJ UNIT PRICE	ORIG COND	YEAR ON	YEAR ACTUAL	Q	% COND	OB/XF MKT VALUE	NOTES

LAND DESCRIPTION

TOTAL OB/XF 0

L N	USE CODE	CLS	LAND USE DESCRIPTION	CAP	R D	LOC ZONE	FRONT	DEPTH	TOT LND UTS	UNIT TYPE	D T	DPTH FACT	% COND	TOT ADJ	UNIT PRICE	ADJ UNIT PRICE	LAND VALUE	OTHER ADJUSTMENTS AND NOTES	YEAR	DENSITY	DECL	FRZ	YR	CONSRV

REVIEW DATE 09/26/2018 BY SBX Total Acres: 0.00 Total Land Value: 200,000 Market: 0 Agricultural: 0 Common: 200,000 PRINTED 08/02/2023 BY SYS