LOTS 14 & 15
IN OR 2009/447
ESMT OR 1037/1260

NEWCOMER JOHN & LYNN
86385 MEADOWFIELD BLUFFS RD
YULEE, FL 32097

2023

38-2N-27-1330-0014-0000

BUILDING CHARACTERISTICS

ELEMENT	CD	CONSTRUCTION
Exterior Wall	16	WD FR STUC 100
Roof Structur	08	IRREGULAR 100
Roof Cover	03	COMP SHNGL 100
Interior Wall	05	DRYWALL 100
Interior Floo	12	HARDWOOD 50
Interior Floo	14	CARPET 50
Air Condition	03	CENTRAL 100
Heating Type	04	AIR DUCTED 100
Bedrooms		4 100
Bathrooms		4 100
Frame	02	WOOD FRAME 100
Stories	2.	2. 100
Units		0 100
Occupancy	00	NONE 100
Quality	02	Quality Level 02
DOR CODE	0100	SINGLE FAMILY
MAP NUM		MKT AREA 04
NEIGHBORHOOD/LOC	4056.00	

AREA TYPE	TOTAL GROSS AREA	PCT OF BASE	TOT ADJ AREA	SUBAREA MARKET VALUE
BAS	2,770	100	2,770	313,262
BAS	324	100	324	36,641
BAS	288	100	288	32,570
FGR	512	55	282	31,891
FOP	45	30	14	1,583
FOP	84	30	25	2,828
FST	72	55	40	4,524
FST	119	55	65	7,351
FUS	1,553	100	1,553	175,630
PTO	350	5	18	2,036
TOTALS	6,189		5,411	611,936

MARKET ADJUSTMENTS

TYPE	MDL	EFF. AREA	TOT ADJ PTS	EFF. BASE RATE	REPL. COST NEW	AYB	EYB	ECON	FNCT		NORM	% COND
0900	01	5,411	99.7262	118.42	640,771	2002	2013	0	0	0	4.50	95.50

1 SNGL FAM – 100% - 2016 Heated Area: 4935 HX Base Yr 2016

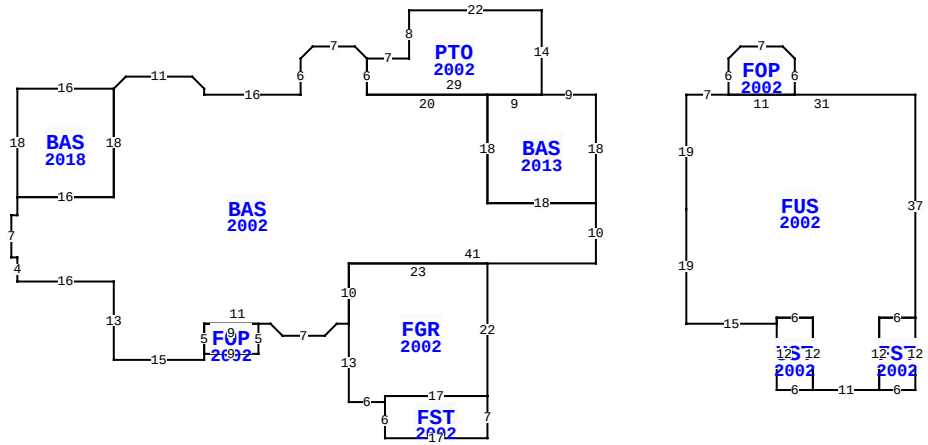

** This building has 11 Sub-Areas

86385 MEADOWFIELD BLUFFS RD, YULEE

BLD DATE		LGL DATE	
XF DATE		LAND DATE	
INC DATE		AG DATE	

NASSAU COUNTY PROPERTY

PAGE 1 of 1 4

VALUATION SUMMARY

VALUATION BY		STANDARD
Tax Group: 4	Tax Dist:	
BUILDING MARKET VALUE		611,936
TOTAL MARKET OB/XF VALUE		38,750
TOTAL LAND VALUE - MARKET		320,000
TOTAL MARKET VALUE		970,686
SOH/AGL Deduction		290,379
ASSESSED VALUE		680,307
TOTAL EXEMPTION VALUE	HX HB VX	55,000
BASE TAXABLE VALUE		625,307
TOTAL JUST VALUE		970,686
NCON VALUE		0
INCOME VALUE		
PREVIOUS YEAR MKT VALUE		908,721

PERMIT NUM	DESCRIPTION	AMT	ISSUED
20008759	ADDITION	9,660	09/22/2020
17004447	REMODEL	54,000	05/18/2017
B0109142	NEW CONSTR	300,000	12/01/2001

SALES DATA

OFF RECORD Number	DATE	TYPE INST	Q / U	V / I	RSN CD	SALE PRICE
2009/0447	9/18/2015	SW	U	I	12	404,300
GRANTOR: CSFB ADJ RATE MORTGAG						
GRANTEE: NEWCOMER JOHN & LYN						
1966/1276	3/09/2015	CT	U	I	18	100
GRANTOR: CLERK OF COURT						
GRANTEE: CSFB ADJUSTABLE RAT						

BUILDING NOTES

BUILDING DIMENSIONS

BAS=[YR=2013] W9 PTO=[YR=2002] N14 W22 S8 W7 BAS=[YR=2002] U2 L2 W7 L2 D2 S6 W16 N1 L2 U2 W11 D2 L2 BAS=[YR=2018] W16 S18 E16N18$ S18 W16 S3 W1 S7 E1 S4 E16 S13 E15 N1 FOP=[YR=2002] E9 N5 W9 S5$ N5 E11 D2 R2 E7 U2 R2 E2 FGR=[YR=2002] S13 E6 FST=[YR=2002] S6 E17 N7 W17 S1$ N1 E17 N22 W23 S10 $N10 E41 N10 W18 N18 W20 N6 $ S6 E29 $ W9 S18 E18 N18 $ PTR=E15 FUS=[YR=2002] E7 FOP=[YR=2002] N6 U2 R2 E7 D2 R2 S6 W11$ E31 S37 FST=[YR=2002] S12 W6 N12 E6 $ W6 S12 W11 UST=[YR=2002] W6 N12 E6 S12$ N12 W6 S1 W15 N19 N19 $ W15 $.

EXTRA FEATURES

LN	OB/XF CODE	DESCRIPTION	BLD	CAP	L	W	UNITS	UT	Adj R	ADJ UNIT PRICE	ORIG COND	YEAR ON	YEAR ACTUAL	Q	% COND	OB/XF MKT VALUE	NOTES
1	0300	BOAT DCK W	0	100	0	0	130.00	SF	40.00	40.00	100	1997	1997	3	26	1,352	
2	0500	FP-PRE FAB	0	100	0	0	3.00	UT	3,500.00	3,500.00	100	2002	2002	3	87	9,135	
3	0812	CONCRETE C	0	100	0	0	2,533.00	SF	4.00	4.00	100	2002	2002	3	83	8,410	
5	1241	WD DECK G	0	100	6	18	108.00	UT	11.50	11.50	100	2002	2002	3	32	397	
7	0300	BOAT DCK W	0	100	140	4	560.00	SF	30.00	30.00	100	1997	1997	3	26	4,368	
8	0812	CONCRETE C	0	100	0	0	4,386.00	SF	4.00	4.00	100	2004	2004	3	86	15,088	

LAND DESCRIPTION

TOTAL OB/XF 38,750

LN	USE CODE	CLS	LAND USE DESCRIPTION	CAP	RD	LOC ZONE	FRONT	DEPTH	TOT LND UTS	UNIT TYPE	DT	DPTH FACT	% COND	TOT ADJ	UNIT PRICE	ADJ UNIT PRICE	LAND VALUE	OTHER ADJUSTMENTS AND NOTES	YEAR	DENSITY	DECL	FRZ	YR	CONSRV
1	000130	C	SFR WATER	100	0006	RS-1	0.00	0.00	2.00	LT		1.00	1.00	0.80	200,000.00	160,000.00	320,000							

REVIEW DATE 07/01/2019 BY TWMB Total Acres: 0.00 Total Land Value: 320,000 Market: 0 Agricultural: 0 Common: 320,000 PRINTED 08/02/2023 BY SYS