LOTS 10 & 11
IN OR 774/715
MEADOWFIELD BLUFFS PB 5/105

GEIGER CHARLES H/GEIGER DODIMEAD ELVIA L
86423 MEADOWFIELD BLUFFS ROAD
YULEE, FL 32097

2023

38-2N-27-1330-0010-0000

NASSAU COUNTY PROPERTY

BUILDING CHARACTERISTICS

ELEMENT	CD	CONSTRUCTION
Exterior Wall	20	FACE BRICK 80
Exterior Wall	05	AVERAGE 20
Roof Structur	08	IRREGULAR 100
Roof Cover	03	COMP SHNGL 100
Interior Wall	05	DRYWALL 100
Interior Floo	12	HARDWOOD 70
Interior Floo	11	CLAY TILE 30
Air Condition	03	CENTRAL 100
Heating Type	04	AIR DUCTED 100
Bedrooms		2 100
Bathrooms		3 100
Frame	02	WOOD FRAME 100
Stories	1.5	1.5 100
Units		0 100
Occupancy	00	NONE 100
Quality	02	Quality Level 02
DOR CODE	0100	SINGLE FAMILY
MAP NUM		MKT AREA 04
NEIGHBORHOOD/LOC	4056.00	

AREA TYPE	TOTAL GROSS AREA	PCT OF BASE	TOT ADJ AREA	SUBAREA MARKET VALUE
BAS	2,183	100	2,183	218,308
FSP	2,185	40	874	87,403
FUS	453	100	453	45,301
UDC	360	25	90	9,000
UDC	600	25	150	15,001
UDG	1,500	55	825	82,503
TOTALS	7,281		4,575	457,517

MARKET ADJUSTMENTS

TYPE	MDL	EFF. AREA	TOT ADJ PTS	EFF. BASE RATE	REPL. COST NEW	AYB	EYB	ECON	FNCT		NORM	% COND
0900	01	4,575	96.2426	114.29	522,877	2004	2004	0	0	0	12.50	87.50

1 SNGL FAM – 100% - 2005 Heated Area: 2636 HX Base Yr 2005

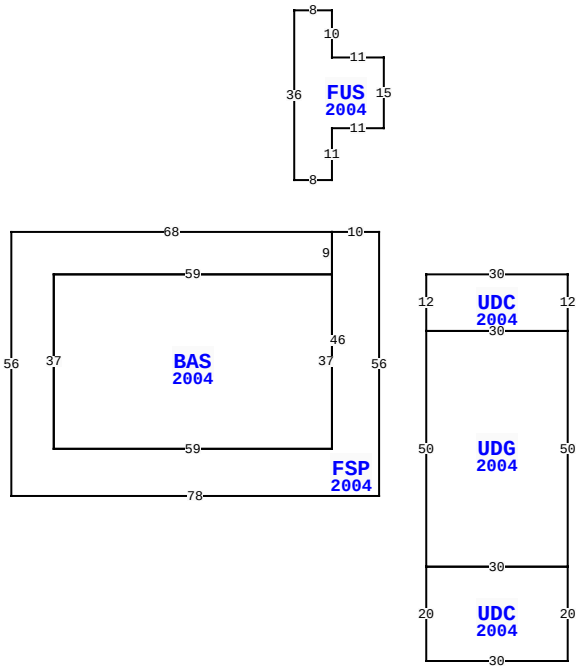

86423 MEADOWFIELD BLUFFS RD, YULEE

BLD DATE		LGL DATE	
XF DATE		LAND DATE	
INC DATE		AG DATE	

VALUATION SUMMARY

VALUATION BY		STANDARD
Tax Group: 4	Tax Dist:	
BUILDING MARKET VALUE		457,517
TOTAL MARKET OB/XF VALUE		13,449
TOTAL LAND VALUE - MARKET		340,000
TOTAL MARKET VALUE		810,966
SOH/AGL Deduction		295,662
ASSESSED VALUE		515,304
TOTAL EXEMPTION VALUE	HX HB	50,000
BASE TAXABLE VALUE		465,304
TOTAL JUST VALUE		810,966
NCON VALUE		0
INCOME VALUE		
PREVIOUS YEAR MKT VALUE		717,443

PERMIT NUM	DESCRIPTION	AMT	ISSUED
B0209836	NEW CONSTR	188,836	06/01/2002
B0209837	GARAGE	585,000	06/01/2002

SALES DATA

OFF RECORD Number	DATE	TYPE INST	Q U	V I	RSN CD	SALE PRICE
0774/0715	10/18/1996	WD	U	V	09	45,000

GRANTOR: MEADOWFIELD BLUFFS IN

GRANTEE: GEIGER CHARLES H &

BUILDING NOTES

BUILDING DIMENSIONS

BAS=[YR=2004] W59 S37 E59 N37 $ FSP=[YR=2004] N9 W68 S56 E78 N56 W10 S46 W59 N37 E59$ PTR= N20 FUS=[YR=2004] N11 E11 N15 W11 N10 W8 S36 E8 $ S20 $ PTR= E20 UDC=[YR=2004] E30 S12 UDG=[YR=2004] S50 UDC=[YR=2004] S20 W30 N20 E30 $ W30 N50 E30 $ W30 N12 $ W20 $.

EXTRA FEATURES

L N	OB/XF CODE	DESCRIPTION	BLD	CAP	L	W	UNITS	UT	Adj R	ADJ UNIT PRICE	ORIG COND	YEAR ON	YEAR ACTUAL	Q	% COND	OB/XF MKT VALUE	NOTES
1	0300	BOAT DCK W	0	100	0	0	291.00	SF	40.00	40.00	100	1999	1999	3	28	3,259	
2	0311	WD GANG WY	0	100	0	0	13.00	SF	45.00	45.00	100	1999	1999	3	20	117	
3	0303	FLT DOCK W	0	100	20	8	160.00	SF	26.00	26.00	100	1999	1999	3	28	1,165	
4	0350	CARPORT WD	0	100	46	11	506.00	SF	14.30	14.30	100	1999	1999	3	20	1,447	
5	0504	FP-ELECTRI	0	100	0	0	1.00	UT	2,000.00	2,000.00	100	2004	2004	3	89	1,780	
6	1242	WD DECK A	0	100	315	4	1,260.00	SF	10.00	10.00	100	1999	1999	3	20	2,520	
7	0351	CARPORT MT	0	100	22	20	440.00	SF	10.00	10.00	100	2006	2006	3	31	1,364	
8	0476	VF 6 SBPL	0	100	0	0	78.00	LF	32.00	32.00	100	2006	2006	3	72	1,797	

LAND DESCRIPTION

TOTAL OB/XF 13,449

L N	USE CODE	CLS	LAND USE DESCRIPTION	CAP	R D	LOC ZONE	FRONT	DEPTH	TOT LND UTS	UNIT TYPE	D T	DPTH FACT	% COND	TOT ADJ	UNIT PRICE	ADJ UNIT PRICE	LAND VALUE	OTHER ADJUSTMENTS AND NOTES	YEAR	DENSITY	DECL	FRZ	YR	CONSRV
1	000130	C	SFR WATER	100	0006	RS-1	0.00	0.00	2.00	LT		1.00	1.00	0.85	200,000.00	170,000.00	340,000							

REVIEW DATE 12/28/2022 BY NWA Total Acres: 0.00 Total Land Value: 340,000 Market: 0 Agricultural: 0 Common: 340,000 PRINTED 08/02/2023 BY SYS