LOT 23
IN OR 802/897
CASE #98-03917-FM

IRONS CHARLOTTE J
83158 ST MARK DR
YULEE, FL 32097

2023

38-2N-27-127C-0023-0000

NASSAU COUNTY PROPERTY

BUILDING CHARACTERISTICS

ELEMENT	CD	CONSTRUCTION
Exterior Wall	05	AVERAGE 100
Roof Structur	03	GABLE/HIP 100
Roof Cover	03	COMP SHNGL 100
Interior Wall	05	DRYWALL 100
Interior Floo	14	CARPET 80
Interior Floo	08	SHT VINYL 20
Air Condition	03	CENTRAL 100
Heating Type	04	AIR DUCTED 100
Bedrooms		3 100
Bathrooms		2 100
Frame	02	WOOD FRAME 100
Stories	1.	1. 100
Units		0 100
Occupancy	00	NONE 100
Quality	05	Quality Level 05
DOR CODE	0100	SINGLE FAMILY
MAP NUM		MKT AREA 04
NEIGHBORHOOD/LOC	4046.00	

AREA TYPE	TOTAL GROSS AREA	PCT OF BASE	TOT ADJ AREA	SUBAREA MARKET VALUE
BAS	1,436	100	1,436	137,803
FGR	340	55	187	17,945
FOP	15	30	4	383
PTO	250	5	12	1,151
TOTALS	2,041		1,639	157,284

MARKET ADJUSTMENTS

TYPE	MDL	EFF. AREA	TOT ADJ PTS	EFF. BASE RATE	REPL. COST NEW	AYB	EYB	ECON	FNCT		NORM	% COND
0100	01	1,639	121.1760	109.36	179,241	1997	1997	0	0	0	12.25	87.75

1 SINGLE FAM – 100% - 1998 Heated Area: 1436 HX Base Yr 1998

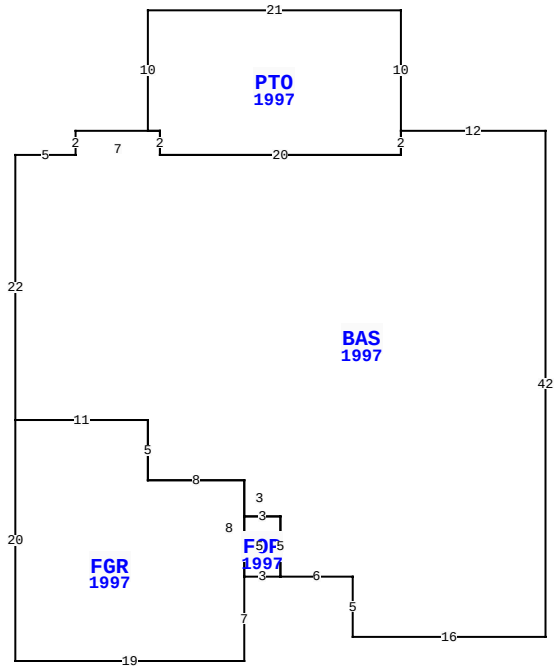

83158 ST MARK DR, YULEE

BLD DATE	05/10/2022 NW	LGL DATE	
XF DATE		LAND DATE	
INC DATE		AG DATE	

VALUATION SUMMARY

VALUATION BY		STANDARD
Tax Group: 4	Tax Dist:	
BUILDING MARKET VALUE		157,284
TOTAL MARKET OB/XF VALUE		6,107
TOTAL LAND VALUE - MARKET		50,000
TOTAL MARKET VALUE		213,391
SOH/AGL Deduction		95,538
ASSESSED VALUE		117,853
TOTAL EXEMPTION VALUE	HX HB	50,000
BASE TAXABLE VALUE		67,853
TOTAL JUST VALUE		213,391
NCON VALUE		0
INCOME VALUE		
PREVIOUS YEAR MKT VALUE		183,602

PERMIT NUM	DESCRIPTION	AMT	ISSUED
973906	NEW CONSTR	58,766	05/01/1997

SALES DATA

OFF RECORD Number	DATE	TYPE INST	Q / U	V / I	RSN CD	SALE PRICE
0802/0897	8/08/1997	WD	Q	I		91,500
GRANTOR: HALLMARK HOMES INC						
GRANTEE: IRONS SHANE A & CHA						
0783/0565	1/24/1997	WD	U	V	19	17,000
GRANTOR: R E D LIMITED PARTNER						
GRANTEE: HALLMARK HOMES INC						

BUILDING NOTES

BUILDING DIMENSIONS

BAS=[YR=1997] W12 PTO=[YR=1997] N10 W21 S10 E1 S2 E20 N2 $ S2 W20 N2 W7 S2 W5 S22 FGR=[YR=1997] S20 E19 N7 FOP=[YR=1997] E3 N5 W3 S5 $ N8 W8 N5 W11 $ E11 S5 E8 S3 E3 S5 E6 S5 E16 N42 $.

EXTRA FEATURES

LN	OB/XF CODE	DESCRIPTION	BLD	CAP	L	W	UNITS	UT	Adj R	ADJ UNIT PRICE	ORIG COND	YEAR ON	YEAR ACTUAL	Q	% COND	OB/XF MKT VALUE	NOTES
1	0500	FP-PRE FAB	0	100	0	0	1.00	UT	3,500.00	3,500.00	100	1997	1997	3	81	2,835	
2	0811	CONCRETE B	0	100	0	0	839.00	SF	5.20	5.20	100	1997	1997	3	75	3,272	

LAND DESCRIPTION

TOTAL OB/XF 6,107

LN	USE CODE	CLS	LAND USE DESCRIPTION	CAP	RD	LOC ZONE	FRONT	DEPTH	TOT LND UTS	UNIT TYPE	DT	DPTH FACT	% COND	TOT ADJ	UNIT PRICE	ADJ UNIT PRICE	LAND VALUE	OTHER ADJUSTMENTS AND NOTES	YEAR	DENSITY	DECL	FRZ	YR	CONSRV
1	000100	C	SFR	100			0.00	0.00	1.00	LT		1.00	1.00	1.00	50,000.00	50,000.00	50,000							

REVIEW DATE 05/25/2018 BY SBX Total Acres: 0.00 Total Land Value: 50,000 Market: 0 Agricultural: 0 Common: 50,000 PRINTED 08/02/2023 BY SYS