LOT 71
IN OR 748 PG 1835
LOFTON OAKS @ YULEE HOME

SMITH JIMMY B & SON C
84077 SAINT PAUL BLVD
YULEE, FL 32097

2023

38-2N-27-1270-0071-0000

NASSAU COUNTY PROPERTY

BUILDING CHARACTERISTICS

ELEMENT	CD	CONSTRUCTION
Exterior Wall	05	AVERAGE 100
Roof Structur	03	GABLE/HIP 100
Roof Cover	03	COMP SHNGL 100
Interior Wall	05	DRYWALL 100
Interior Floo	14	CARPET 80
Interior Floo	08	SHT VINYL 20
Air Condition	03	CENTRAL 100
Heating Type	04	AIR DUCTED 100
Bedrooms		4 100
Bathrooms		3 100
Frame	02	WOOD FRAME 100
Stories	1.	1. 100
Units		0 100
Occupancy	00	NONE 100
Quality	05	Quality Level 05
DOR CODE	0100	SINGLE FAMILY
MAP NUM		MKT AREA 04
NEIGHBORHOOD/LOC	4046.00	

AREA TYPE	TOTAL GROSS AREA	PCT OF BASE	TOT ADJ AREA	SUBAREA MARKET VALUE
BAS	266	100	266	25,658
BAS	1,207	100	1,207	116,424
FGR	418	55	230	22,185
FOP	178	30	53	5,112
PTO	200	5	10	965
TOTALS	2,269		1,766	170,344

MARKET ADJUSTMENTS

TYPE	MDL	EFF. AREA	TOT ADJ PTS	EFF. BASE RATE	REPL. COST NEW	AYB	EYB	ECON	FNCT		NORM	% COND
0100	01	1,766	123.2000	111.19	196,362	1995	1995	0	0	0	13.25	86.75

1 SINGLE FAM – 100% - 2015 Heated Area: 1473 HX Base Yr

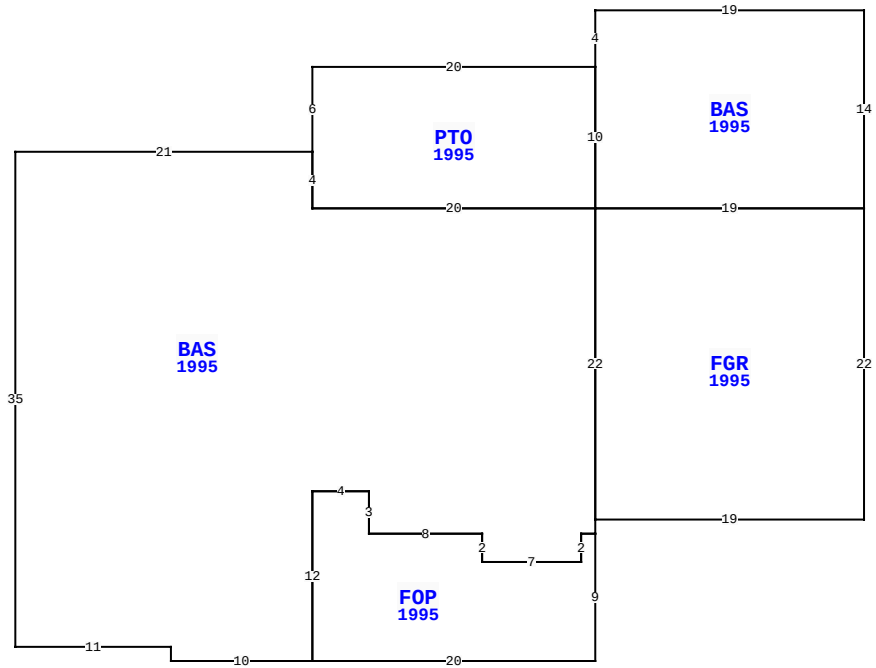

84077 ST PAUL BLVD, YULEE

BLD DATE	05/10/2022 NW	LGL DATE	
XF DATE		LAND DATE	
INC DATE		AG DATE	

VALUATION SUMMARY

VALUATION BY		STANDARD
Tax Group: 4	Tax Dist:	
BUILDING MARKET VALUE		170,344
TOTAL MARKET OB/XF VALUE		3,568
TOTAL LAND VALUE - MARKET		50,000
TOTAL MARKET VALUE		223,912
SOH/AGL Deduction		0
ASSESSED VALUE		223,912
TOTAL EXEMPTION VALUE	13	223,912
BASE TAXABLE VALUE		0
TOTAL JUST VALUE		223,912
NCON VALUE		0
INCOME VALUE		
PREVIOUS YEAR MKT VALUE		194,135

PERMIT NUM	DESCRIPTION	AMT	ISSUED
95-02301	NEW CONSTR	63,088	10/01/1995

SALES DATA

OFF RECORD Number	DATE	TYPE INST	Q U /	V I /	RSN CD	SALE PRICE
0748/1835	1/17/1995	WD	Q	I		76,800
GRANTOR: HOLLMARK HOMES INC						
GRANTEE: SMITH JIMMY & SON						
0740/0011	9/25/1995	WD	U	V	19	9,000
GRANTOR: ATLANTIC BUILDERS INC						
GRANTEE: HALLMARK HOMES INC						

BUILDING NOTES

BUILDING DIMENSIONS

BAS=[YR=1995] W19 S4 PTO=[YR=1995] W20 S6 BAS=[YR=1995] W21 S35 E11 S1 E10 FOP=[YR=1995] E20 N9 W1 S2 W7 N2 W8 N3 W4 S12 $ N12 E4 S3 E8 S2 E7 N2 E1 N1 FGR=[YR=1995] E19 N22 W19 S22 $ N22 W20 N4 $ S4 E20 N10 $ S10 E19 N14 $.

EXTRA FEATURES

LN	OB/XF CODE	DESCRIPTION	BLD	CAP	L	W	UNITS	UT	Adj R	ADJ UNIT PRICE	ORIG COND	YEAR ON	YEAR ACTUAL	Q	% COND	OB/XF MKT VALUE	NOTES
1	0811	CONCRETE B	0	100	0	0	940.00	SF	5.20	5.20	100	1996	1996	3	73	3,568	

LAND DESCRIPTION

TOTAL OB/XF 3,568

LN	USE CODE	CLS	LAND USE DESCRIPTION	CAP	RD	LOC ZONE	FRONT	DEPTH	TOT LND UTS	UNIT TYPE	DT	DPTH FACT	% COND	TOT ADJ	UNIT PRICE	ADJ UNIT PRICE	LAND VALUE	OTHER ADJUSTMENTS AND NOTES	YEAR	DENSITY	DECL	FRZ	YR	CONSRV
1	000100	C	SFR	100		PUD	0.00	0.00	1.00	LT		1.00	1.00	1.00	50,000.00	50,000.00	50,000							

REVIEW DATE 05/25/2018 BY SBX Total Acres: 0.00 Total Land Value: 50,000 Market: 0 Agricultural: 0 Common: 50,000 PRINTED 08/02/2023 BY SYS