LOT 6 & PT JOHN VAAUGHAN GRANT
SEC 38-2N-27 IN OR 2538/1235
ESMT OR 673/592

DEBELLIS NICHOLAS & HEATHER A
85386 MINER RD
YULEE, FL 32097

2023

38-2N-27-0580-0006-0000

NASSAU COUNTY PROPERTY

BUILDING CHARACTERISTICS

ELEMENT	CD	CONSTRUCTION
Exterior Wall	12	CEDAR 100
Roof Structur	03	GABLE/HIP 100
Roof Cover	03	COMP SHNGL 100
Interior Wall	05	DRYWALL 100
Interior Floo	13	LVT/LAMNT 50
Interior Floo	14	CARPET 50
Air Condition	03	CENTRAL 100
Heating Type	04	AIR DUCTED 100
Bedrooms		3 100
Bathrooms		2.5 100
Frame	02	WOOD FRAME 100
Stories	2.	2. 100
Units		0 100
Occupancy	00	NONE 100
Quality	03	Quality Level 03

DOR CODE	5000	IMPROVED AG	
MAP NUM		MKT AREA	04
NEIGHBORHOOD/LOC	4053.00		

AREA TYPE	TOTAL GROSS AREA	PCT OF BASE	TOT ADJ AREA	SUBAREA MARKET VALUE
BAS	1,622	100	1,622	145,098
FGR	552	55	304	27,194
FOP	208	30	62	5,546
FOP	216	30	65	5,814
FOP	226	30	68	6,083
FUS	668	100	668	59,756
PTO	270	5	14	1,252
TOTALS	3,762		2,803	250,744

MARKET ADJUSTMENTS

TYPE	MDL	EFF. AREA	TOT ADJ PTS	EFF. BASE RATE	REPL. COST NEW	AYB	EYB	ECON	FNCT		NORM	% COND
0100	01	2,803	112.0000	101.08	283,327	1999	1999	0	0	0	11.50	88.50

2 SINGLE FAM – 0% - 2023 Heated Area: 2290 HX Base Yr

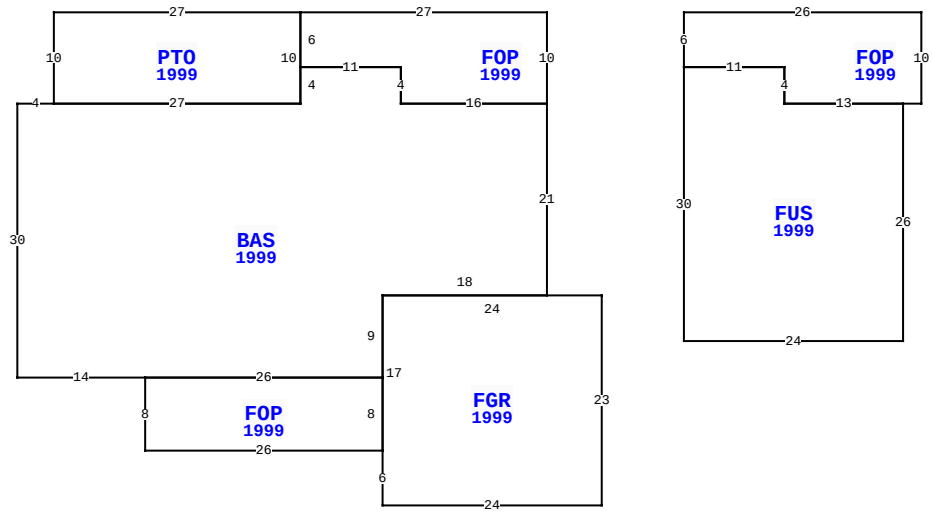

85386 MINER RD, YULEE

BLD DATE		LGL DATE	
XF DATE		LAND DATE	
INC DATE		AG DATE	

NASSAU COUNTY PROPERTY — VALUATION SUMMARY

VALUATION BY	STANDARD
Tax Group: 4	Tax Dist:
BUILDING MARKET VALUE	250,744
TOTAL MARKET OB/XF VALUE	8,050
TOTAL LAND VALUE - MARKET	812,800
TOTAL MARKET VALUE	342,032
SOH/AGL Deduction	0
ASSESSED VALUE	342,032
TOTAL EXEMPTION VALUE	0
BASE TAXABLE VALUE	342,032
TOTAL JUST VALUE	1,071,594
NCON VALUE	0
INCOME VALUE	
PREVIOUS YEAR MKT VALUE	261,679

PERMIT NUM	DESCRIPTION	AMT	ISSUED
963213	NEW CONSTR	97,330	08/01/1996

SALES DATA

OFF RECORD Number	DATE	TYPE INST	Q / U	V / I	RSN CD	SALE PRICE
2538/1235	2/10/2022	WD	Q	I	01	500,000
GRANTOR: HUMPHREYS ROBIN & ET						
GRANTEE: DEBELLIS NICHOLAS &						
2472/0163	6/15/2021	FJ	U	I	11	0
GRANTOR: WESLEY JACQULEINE EST						
GRANTEE: HUMPHREYS ROBIN ET						

BUILDING NOTES

BUILDING DIMENSIONS

FOP=[YR=1999] W27 PTO=[YR=1999] W27 S10 BAS=[YR=1999] W4 S30 E14 FOP=[YR=1999] S8 E26 FGR=[YR=1999] S6 E24 N23 W24 S17 $ N8 W26 $ E26 N9 E18 N21 W16 N4 W11 S4 W27 $ E27 N10 $ S6 E11 S4 E16 N10 $ PTR= E15 FOP=[YR=1999] E26 S10 W2 FUS=[YR=1999] S26 W24 N30 E11 S4 E13 $ W13 N4 W11 N6 $ W15 $.

EXTRA FEATURES

LN	OB/XF CODE	DESCRIPTION	BLD	CAP	L	W	UNITS	UT	Adj R	ADJ UNIT PRICE	ORIG COND	YEAR ON	YEAR ACTUAL	Q	% COND	OB/XF MKT VALUE	NOTES
1	0940	SHEDS/PORT	0	0	8	8	64.00	SF	30.00	30.00	100	1987	1987	3	20	384	
2	0681	POLE SHED	0	0	20	36	720.00	SF	15.00	15.00	100	1990	1990	3	20	2,160	
4	0810	CONCRETE A	0	0	0	0	745.00	SF	6.50	6.50	100	1999	1999	3	79	3,826	
5	0504	FP-ELECTRI	0	0	0	0	1.00	UT	2,000.00	2,000.00	100	1999	1999	3	84	1,680	

LAND DESCRIPTION

TOTAL OB/XF 8,050

LN	USE CODE	CLS	LAND USE DESCRIPTION	CAP	RD	LOC ZONE	FRONT	DEPTH	TOT LND UTS	UNIT TYPE	DT	DPTH FACT	% COND	TOT ADJ	UNIT PRICE	ADJ UNIT PRICE	LAND VALUE	OTHER ADJUSTMENTS AND NOTES	YEAR	DENSITY	DECL	FRZ	YR	CONSRV
1	005000	C	RURAL HOME	0		OR	0.00	0.00	1.00	AC		1.00	1.00	1.00	80,000.00	80,000.00	80,000							
2	005902	A	HARDWOOD SI	0			0.00	0.00	6.16	AC		1.00	1.00	1.00	175.00	175.00	1,078							
3	005400	A	TIMBER 1 SI	0			0.00	0.00	3.00	AC		1.00	1.00	1.00	720.00	720.00	2,160							
4	009910	M	MKT.VAL.AG	0			0.00	0.00	9.16	AC		1.00	1.00	1.00	80,000.00	80,000.00	732,800							

REVIEW DATE 08/03/2020 BY NWA Total Acres: 10.16 Total Land Value: 83,238 Market: 732,800 Agricultural: 3,238 Common: 80,000 PRINTED 08/02/2023 BY SYS