IN OR 724/612
PARCELS 14-20 & 14-21
R621774

POWELL TERRELL J & MARY C/
96005 OSPREY POINT LANE
FERNANDINA BEACH, FL 32034

2023

38-2N-27-0000-0014-0200

NASSAU COUNTY PROPERTY

BUILDING CHARACTERISTICS

ELEMENT	CD	CONSTRUCTION
Exterior Wall	16	WD FR STUC 100
Roof Structur	04	WOOD TRUSS 100
Roof Cover	03	COMP SHNGL 100
Interior Wall	05	DRYWALL 100
Interior Floo	14	CARPET 90
Interior Floo	11	CLAY TILE 10
Ceiling	01	FIN.SUSPD 100
Air Condition	03	CENTRAL 100
Heating Type	04	AIR DUCTED 100
Fixtures		11 100
Frame	02	WOOD FRAME 100
Story Height		8 100
RMS		12 100
Stories	2.	2. 100
Units		0 100
BUD8 Adjustme	04	DIST 01 100
Occupancy	OO	OWNER OCC 100
Quality	03	Quality Level 03
DOR CODE	1800	MULTI STORY OFFICE
MAP NUM		MKT AREA 04
NEIGHBORHOOD/LOC	4002.00	

AREA TYPE	TOTAL GROSS AREA	PCT OF BASE	TOT ADJ AREA	SUBAREA MARKET VALUE
BAS	960	100	960	72,503
BAS	792	100	792	59,815
CAN	50	30	15	1,133
CAN	16	30	5	378
CAN	52	30	16	1,208
CAN	125	30	38	2,870
CAN	125	30	38	2,870
FUS	906	100	906	68,424
STR	56	10	6	453
TOTALS	3,082		2,776	209,653

MARKET ADJUSTMENTS

TYPE	MDL	EFF. AREA	TOT ADJ PTS	EFF. BASE RATE	REPL. COST NEW	AYB	EYB	ECON	FNCT		NORM	% COND
1701	04	2,776	89.3880	126.93	352,358	1989	1989	0	0	0	40.50	59.50

1 OFFICE 1&2 – 0% - 0 Heated Area: 2658 HX Base Yr

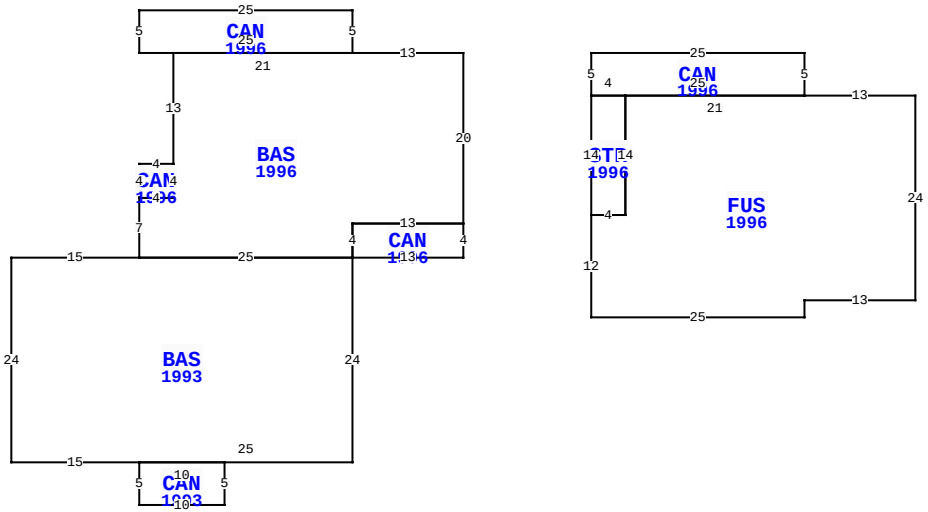

463499 SR 200, YULEE

BLD DATE	10/07/2021	KK	LGL DATE	
XF DATE	10/07/2021	KK	LAND DATE	10/07/2021 KK
INC DATE			AG DATE	

NASSAU COUNTY PROPERTY — VALUATION SUMMARY

VALUATION BY	STANDARD
Tax Group: 4	Tax Dist:
BUILDING MARKET VALUE	422,108
TOTAL MARKET OB/XF VALUE	13,292
TOTAL LAND VALUE - MARKET	142,200
TOTAL MARKET VALUE	577,600
SOH/AGL Deduction	104,524
ASSESSED VALUE	473,076
TOTAL EXEMPTION VALUE	0
BASE TAXABLE VALUE	473,076
TOTAL JUST VALUE	577,600
NCON VALUE	0
INCOME VALUE	
PREVIOUS YEAR MKT VALUE	430,078

PERMIT NUM	DESCRIPTION	AMT	ISSUED
21010299	ROOF	6,000	08/06/2021
E0413162	NEW CONSTR	8,000	07/01/2004
95-2448	ADDITION	61,313	02/05/1996
2795	H/AC	1,850	11/07/1988
3260	NEW CONSTR	1,850	10/24/1988
5247	NEW CONSTR	33,900	10/18/1988

SALES DATA

OFF RECORD Number	DATE	TYPE INST	Q U	V I	RSN CD	SALE PRICE
0724/0612	2/22/1995	WD	U	I	09	115,000
GRANTOR: PIPER DONALD & PATRIC						
GRANTEE: POWELL TERRELL & MA						
0520/1107	6/24/1987	FS	U	V		100
GRANTOR: BENNETT MONETTE M						
GRANTEE: HARRIS MARY JO MINE						

BUILDING NOTES

BUILDING DIMENSIONS

BAS=[YR=1996] W13 CAN=[YR=1996] N5 W25 S5 E25$ W21 S13 CAN=[YR=1996] W4 S4 E4 N4$ S4 W4 S7 BAS=[YR=1993] W15 S24 E15 CAN=[YR=1993] S5 E10 N5 W10$ E25 N24 CAN=[YR=1996] E13 N4 W13 S4$ W25 $ E25 N4 E13 N20$ PTR=E15 CAN=[YR=1996] E25 S5 FUS=[YR=1996] E13 S24 W13 S2 W25 N12 STR=[YR=1996] N14 E4 S14 W4$ E4 N14 E21$ W25 N5$ W15$.

EXTRA FEATURES

LN	OB/XF CODE	DESCRIPTION	BLD	CAP	L	W	UNITS	UT	Adj R	ADJ UNIT PRICE	ORIG COND	YEAR ON	YEAR ACTUAL	Q	% COND	OB/XF MKT VALUE	NOTES
1	0751	UOP	0	0	8	12	96.00	SF	10.00	10.00	100	1988	1988	3	20	192	
2	0300	BOAT DCK W	0	0	10	16	160.00	SF	40.00	40.00	100	1988	1988	3	20	1,280	
3	0810	CONCRETE A	0	0	8	4	32.00	SF	6.50	6.50	100	1989	1989	3	59.5	124	
4	0803	ASPHALT C	0	0	0	0	3,960.00	SF	2.00	2.00	100	1989	1989	3	50	3,960	
5	0940	SHEDS/PORT	0	0	16	10	160.00	SF	30.00	30.00	100	1992	1992	3	20	960	
7	0940	SHEDS/PORT	0	0	20	10	200.00	SF	30.00	30.00	100	1996	1996	3	20	1,200	
8	0810	CONCRETE A	0	0	0	0	350.00	SF	6.50	6.50	100	2004	2004	3	86	1,957	
9	0525	GAZEBO	0	0	0	0	1.00	UT	5,000.00	5,000.00	100	1998	1998	3	27	1,350	
10	0978	SECURTY LT	0	0	0	0	5.00	UT	450.00	450.00	100	2005	2005	3	69	1,553	
11	1076	TRELLIS A	0	0	31	7	217.00	SF	7.50	7.50	100	2005	2005	3	44	716	

LAND DESCRIPTION

TOTAL OB/XF 13,292

LN	USE CODE	CLS	LAND USE DESCRIPTION	CAP	RD	LOC ZONE	FRONT	DEPTH	TOT LND UTS	UNIT TYPE	DT	DPTH FACT	% COND	TOT ADJ	UNIT PRICE	ADJ UNIT PRICE	LAND VALUE	OTHER ADJUSTMENTS AND NOTES	YEAR	DENSITY	DECL	FRZ	YR	CONSRV
1	001800	C	MULTISTORY	0	0004	CG	100.00	552.00	35,541.00	SF		1.00	1.00	1.00	4.00	4.00	142,164							
2	009500	C	SUBMERGED	0			0.00	0.00	1.45	AC		1.00	1.00	1.00	25.00	25.00	36							

REVIEW DATE 10/07/2021 BY KK Total Acres: 1.45 Total Land Value: 142,200 Market: 0 Agricultural: 0 Common: 142,200 PRINTED 08/02/2023 BY SYS

IN OR 724/612
PARCELS 14-20 & 14-21
R621774

POWELL TERRELL J & MARY C/
96005 OSPREY POINT LANE
FERNANDINA BEACH, FL 32034

2023

38-2N-27-0000-0014-0200

NASSAU COUNTY PROPERTY

BUILDING CHARACTERISTICS

ELEMENT	CD	CONSTRUCTION
Exterior Wall	25	MOD METAL 100
Roof Structur	04	WOOD TRUSS 100
Roof Cover	12	MODULAR MT 100
Interior Wall	05	DRYWALL 100
Interior Floo	13	LVT/LAMNT 100
Ceiling	02	F.NOT SUS 100
Air Condition	03	CENTRAL 100
Heating Type	04	AIR DUCTED 100
Fixtures		3 100
Frame	02	WOOD FRAME 100
Story Height		7 100
RMS		3 100
Stories	1.	1. 100
Units		0 100
Occupancy	00	NONE 100
Quality	03	Quality Level 03

DOR CODE	1800	MULTI STORY OFFICE	
MAP NUM		MKT AREA	04
NEIGHBORHOOD/LOC	4002.00		

AREA TYPE	TOTAL GROSS AREA	PCT OF BASE	TOT ADJ AREA	SUBAREA MARKET VALUE
BAS	672	100	672	10,595
TOTALS	672		672	10,595

MARKET ADJUSTMENTS

TYPE	MDL	EFF. AREA	TOT ADJ PTS	EFF. BASE RATE	REPL. COST NEW	AYB	EYB	ECON	FNCT	DP	NORM	% COND
1709	04	672	91.6650	78.83	52,974	1988	1988	0	0	10	70.00	20.00

2 MH OFFICE – 0% - 0 Heated Area: 672 HX Base Yr

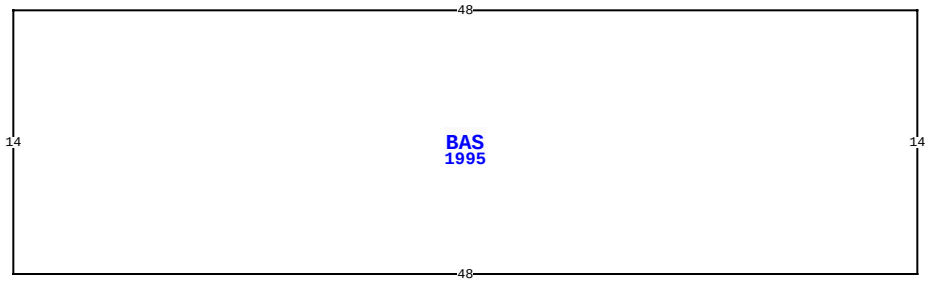

463499 SR 200, YULEE

BLD DATE	10/07/2021	KK	LGL DATE	
XF DATE	10/07/2021	KK	LAND DATE	10/07/2021 KK
INC DATE			AG DATE	

EXTRA FEATURES

L N	OB/XF CODE	DESCRIPTION	BLD	CAP	L	W	UNITS	UT	Adj R	ADJ UNIT PRICE	ORIG COND	YEAR ON	YEAR ACTUAL	Q	% COND	OB/XF MKT VALUE	NOTES

VALUATION SUMMARY

VALUATION BY	STANDARD
Tax Group: 4	Tax Dist:
BUILDING MARKET VALUE	422,108
TOTAL MARKET OB/XF VALUE	13,292
TOTAL LAND VALUE - MARKET	142,200
TOTAL MARKET VALUE	577,600
SOH/AGL Deduction	104,524
ASSESSED VALUE	473,076
TOTAL EXEMPTION VALUE	0
BASE TAXABLE VALUE	473,076
TOTAL JUST VALUE	577,600
NCON VALUE	0
INCOME VALUE	
PREVIOUS YEAR MKT VALUE	430,078

PERMIT NUM	DESCRIPTION	AMT	ISSUED

SALES DATA

OFF RECORD Number	DATE	TYPE INST	Q U	V I	RSN CD	SALE PRICE
0724/0612	2/22/1995	WD	U	I	09	115,000
GRANTOR: PIPER DONALD & PATRIC						
GRANTEE: POWELL TERRELL & MA						
0520/1107	6/24/1987	FS	U	V		100
GRANTOR: BENNETT MONETTE M						
GRANTEE: HARRIS MARY JO MINE						

BUILDING NOTES

BUILDING DIMENSIONS

BAS=[YR=1995] W48 S14 E48 N14 $.

LAND DESCRIPTION

TOTAL OB/XF 0

L N	USE CODE	CLS	LAND USE DESCRIPTION	CAP	R D	LOC ZONE	FRONT	DEPTH	TOT LND UTS	UNIT TYPE	D T	DPTH FACT	% COND	TOT ADJ	UNIT PRICE	ADJ UNIT PRICE	LAND VALUE	OTHER ADJUSTMENTS AND NOTES	YEAR	DENSITY	DECL	FRZ	YR	CONSRV

REVIEW DATE 10/07/2021 BY KK Total Acres: 1.45 Total Land Value: 142,200 Market: 0 Agricultural: 0 Common: 142,200 PRINTED 08/02/2023 BY SYS

IN OR 724/612
PARCELS 14-20 & 14-21
R621774

POWELL TERRELL J & MARY C/
96005 OSPREY POINT LANE
FERNANDINA BEACH, FL 32034

2023

38-2N-27-0000-0014-0200

BUILDING CHARACTERISTICS

ELEMENT	CD	CONSTRUCTION
Exterior Wall	10	ABOVE AVG 50
Exterior Wall	16	WD FR STUC 50
Roof Structur	04	WOOD TRUSS 100
Roof Cover	03	COMP SHNGL 100
Interior Wall	05	DRYWALL 100
Interior Floo	14	CARPET 90
Interior Floo	11	CLAY TILE 10
Ceiling	02	F.NOT SUS 100
Air Condition	03	CENTRAL 100
Heating Type	04	AIR DUCTED 100
Fixtures		3 100
Frame	02	WOOD FRAME 100
Story Height		8 100
RMS		5 100
Stories	2.	2. 100
Units		0 100
Occupancy	00	NONE 100
Quality	03	Quality Level 03
DOR CODE	1800	MULTI STORY OFFICE
MAP NUM		MKT AREA 04
NEIGHBORHOOD/LOC	4002.00	

AREA TYPE	TOTAL GROSS AREA	PCT OF BASE	TOT ADJ AREA	SUBAREA MARKET VALUE
BAS	1,000	100	1,000	99,438
DCK	16	10	2	199
DCK	135	10	14	1,392
FUS	1,000	100	1,000	99,438
STP	16	10	2	199
STR	68	10	7	696
UOP	25	20	5	497
TOTALS	2,260		2,030	201,860

MARKET ADJUSTMENTS

TYPE	MDL	EFF. AREA	TOT ADJ PTS	EFF. BASE RATE	REPL. COST NEW	AYB	EYB	ECON	FNCT	DP	NORM	% COND
1701	04	2,030	92.1375	130.84	265,605	2004	2004	0	0	10	14.00	76.00

3 OFFICE 1&2 – 0% - 0 Heated Area: 2000 HX Base Yr

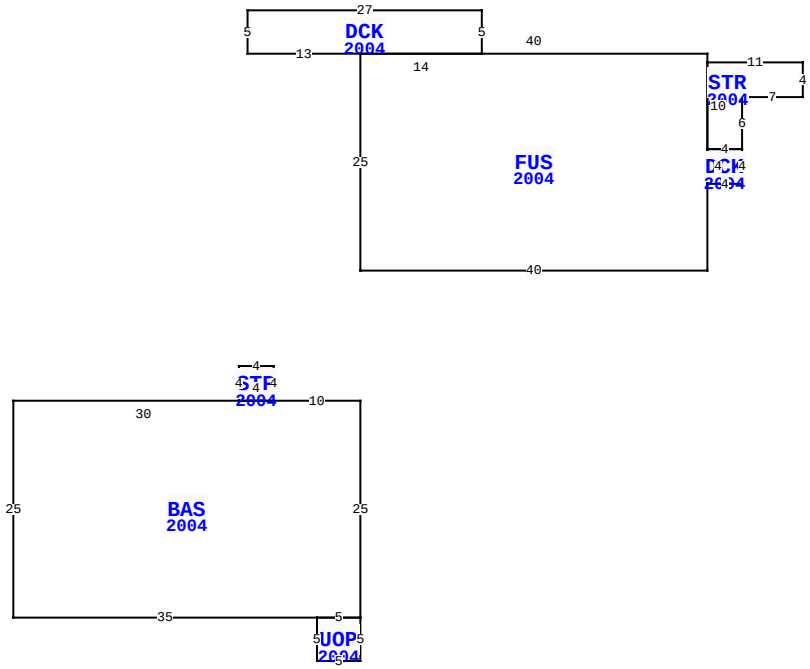

463499 SR 200, YULEE

BLD DATE	10/07/2021	KK	LGL DATE	
XF DATE	10/07/2021	KK	LAND DATE	10/07/2021 KK
INC DATE			AG DATE	

NASSAU COUNTY PROPERTY

PAGE 3 of 3 4

VALUATION SUMMARY

VALUATION BY	STANDARD
Tax Group: 4	Tax Dist:
BUILDING MARKET VALUE	422,108
TOTAL MARKET OB/XF VALUE	13,292
TOTAL LAND VALUE - MARKET	142,200
TOTAL MARKET VALUE	577,600
SOH/AGL Deduction	104,524
ASSESSED VALUE	473,076
TOTAL EXEMPTION VALUE	0
BASE TAXABLE VALUE	473,076
TOTAL JUST VALUE	577,600
NCON VALUE	0
INCOME VALUE	
PREVIOUS YEAR MKT VALUE	430,078

PERMIT NUM	DESCRIPTION	AMT	ISSUED

SALES DATA

OFF RECORD Number	DATE	TYPE INST	Q / U	V / I	RSN CD	SALE PRICE
0724/0612	2/22/1995	WD	U	I	09	115,000
GRANTOR: PIPER DONALD & PATRIC						
GRANTEE: POWELL TERRELL & MA						
0520/1107	6/24/1987	FS	U	V		100
GRANTOR: BENNETT MONETTE M						
GRANTEE: HARRIS MARY JO MINE						

BUILDING NOTES

BUILDING DIMENSIONS

BAS=[YR=2004] W10 STP=[YR=2004] N4 W4 S4 E4$ W30 S25 E35
UOP=[YR=2004] S5 E5 N5 W5$ E5 N25$ PTR=N15 FUS=[YR=2004] N25
DCK=[YR=2004] W13 N5 E27 S5 W14$ E40 S1 STR=[YR=2004] E11 S4
W7 S6 DCK=[YR=2004] S4 W4 N4 E4$ W4 N10$ S24 W40$ S15$.

EXTRA FEATURES

L N	OB/XF CODE	DESCRIPTION	BLD	CAP	L	W	UNITS	UT	Adj R	ADJ UNIT PRICE	ORIG COND	YEAR ON	YEAR ACTUAL	Q	% COND	OB/XF MKT VALUE	NOTES

LAND DESCRIPTION

TOTAL OB/XF 0

L N	USE CODE	CLS	LAND USE DESCRIPTION	CAP	R D	LOC ZONE	FRONT	DEPTH	TOT LND UTS	UNIT TYPE	D T	DPTH FACT	% COND	TOT ADJ	UNIT PRICE	ADJ UNIT PRICE	LAND VALUE	OTHER ADJUSTMENTS AND NOTES	YEAR	DENSITY	DECL	FRZ	YR	CONSRV

REVIEW DATE 10/07/2021 BY KK Total Acres: 1.45 Total Land Value: 142,200 Market: 0 Agricultural: 0 Common: 142,200 PRINTED 08/02/2023 BY SYS