LOT 736
IN OR 2205/1274
HERON ISLES PHASE THREE C

BOWEN SAMUEL R & BRITTANY M
96079 BREEZEWAY COURT
YULEE, FL 32097

2023

37-3N-28-0745-0736-0000

BUILDING CHARACTERISTICS

ELEMENT	CD	CONSTRUCTION
Exterior Wall	16	WD FR STUC 100
Roof Structur	03	GABLE/HIP 100
Roof Cover	03	COMP SHNGL 100
Interior Wall	05	DRYWALL 100
Interior Floo	14	CARPET 70
Interior Floo	11	CLAY TILE 30
Air Condition	03	CENTRAL 100
Heating Type	04	AIR DUCTED 100
Bedrooms		4 100
Bathrooms		3 100
Frame	02	WOOD FRAME 100
Stories	2.	2. 100
Units		0 100
Occupancy	00	NONE 100
Quality	05	Quality Level 05

DOR CODE 0100 SINGLE FAMILY
MAP NUM | MKT AREA 04
NEIGHBORHOOD/LOC 4038.0200

AREA TYPE	TOTAL GROSS AREA	PCT OF BASE	TOT ADJ AREA	SUBAREA MARKET VALUE
BAS	1,724	100	1,724	183,397
FGR	420	55	231	24,574
FOP	49	30	15	1,595
FOP	110	30	33	3,510
FUS	467	100	467	49,679
PTO	210	5	10	1,064
STR	37	10	4	425
TOTALS	3,017		2,484	264,245

MARKET ADJUSTMENTS

TYPE	MDL	EFF. AREA	TOT ADJ PTS	EFF. BASE RATE	REPL. COST NEW	AYB	EYB	ECON	FNCT		NORM	% COND
0100	01	2,484	120.2784	108.55	269,638	2018	2018	0	0	0	2.00	98.00

1 SINGLE FAM – 100% - 2019 Heated Area: 2191 HX Base Yr 2019

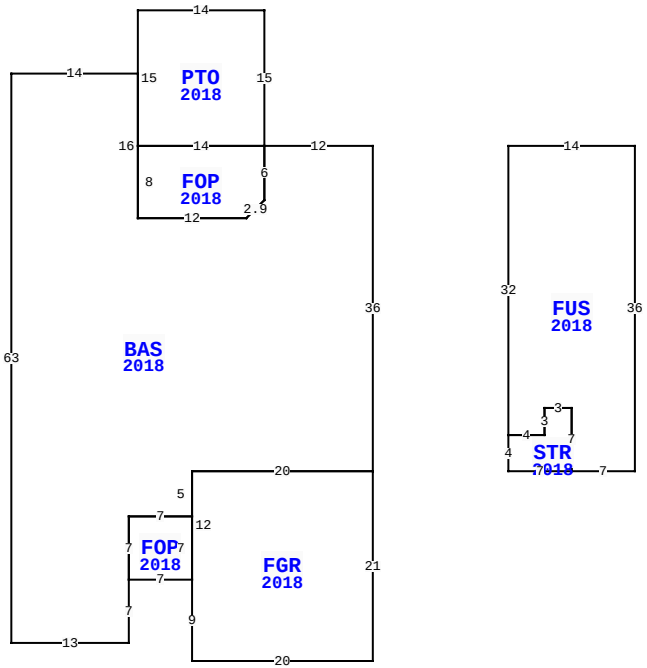

96079 BREEZEWAY CT, YULEE

BLD DATE		LGL DATE	
XF DATE		LAND DATE	
INC DATE		AG DATE	

NASSAU COUNTY PROPERTY

PAGE 1 of 1 4

VALUATION SUMMARY

VALUATION BY		STANDARD
Tax Group: 4	Tax Dist:	
BUILDING MARKET VALUE		264,245
TOTAL MARKET OB/XF VALUE		3,129
TOTAL LAND VALUE - MARKET		55,000
TOTAL MARKET VALUE		322,374
SOH/AGL Deduction		105,604
ASSESSED VALUE		216,770
TOTAL EXEMPTION VALUE	HX HB	50,000
BASE TAXABLE VALUE		166,770
TOTAL JUST VALUE		322,374
NCON VALUE		0
INCOME VALUE		
PREVIOUS YEAR MKT VALUE		273,290

PERMIT NUM	DESCRIPTION	AMT	ISSUED
C1711285	CO ISSUED	0	06/04/2018
B1711285	NEW CONSTR	278,311	12/19/2017

SALES DATA

OFF RECORD Number	DATE	TYPE INST	Q U	V I	RSN CD	SALE PRICE
2205/1274	6/24/2018	WD	Q	I	01	254,000
GRANTOR: DREAM FINDERS HOMES L						
GRANTEE: BOWEN SAMUEL R & BR						
2161/1620	11/30/2017	WD	Q	V	05	168,000
GRANTOR: HERON ISLES JOINT VEN						
GRANTEE: DREAM FINDERS HOMES						

BUILDING NOTES

BUILDING DIMENSIONS

BAS=[YR=2018] W12 PTO=[YR=2018] N15 W14 S15 FOP=[YR=2018] S8 E12 U2 R2 N6 W14$ E14$ S6 D2 L2 W12 N16 W14 S63 E13 N7 FOP=[YR=2018] E7 FGR=[YR=2018] S9 E20 N21 W20 S12$ N7 W7 S7$ N7 E7 N5 E20 N36$ PTR= E15 FUS=[YR=2018] E14 S36 W7 STR=[YR=2018] W7 N4 E4 N3 E3 S7$ N7 W3 S3 W4 N32$ W15$.

EXTRA FEATURES

LN	OB/XF CODE	DESCRIPTION	BLD	CAP	L	W	UNITS	UT	Adj R	ADJ UNIT PRICE	ORIG COND	YEAR ON	YEAR ACTUAL	Q	% COND	OB/XF MKT VALUE	NOTES
1	0811	CONCRETE B	0	100	0	0	539.00	SF	5.20	5.20	100	2018	2018	3	98	2,747	
2	0810	CONCRETE A	0	100	0	0	60.00	SF	6.50	6.50	100	2018	2018	3	98	382	

LAND DESCRIPTION

TOTAL OB/XF 3,129

LN	USE CODE	CLS	LAND USE DESCRIPTION	CAP	RD	LOC ZONE	FRONT	DEPTH	TOT LND UTS	UNIT TYPE	DT	DPTH FACT	% COND	TOT ADJ	UNIT PRICE	ADJ UNIT PRICE	LAND VALUE	OTHER ADJUSTMENTS AND NOTES	YEAR	DENSITY	DECL	FRZ	YR	CONSRV
1	000100	C	SFR	100			0.00	0.00	1.00	LT		1.00	1.00	1.00	55,000.00	55,000.00	55,000							

REVIEW DATE 01/25/2019 BY DJ Total Acres: 0.00 Total Land Value: 55,000 Market: 0 Agricultural: 0 Common: 55,000 PRINTED 08/02/2023 BY SYS