LOT 700
IN OR 2100/854
HERON ISLES PHASE THREE B

GAINES TIMOTHY RAY & SHANTANE T
84172 SWALLOWTAIL DR
YULEE, FL 32097

2023

37-3N-28-0745-0700-0000

NASSAU COUNTY PROPERTY

BUILDING CHARACTERISTICS

ELEMENT	CD	CONSTRUCTION
Exterior Wall	10	ABOVE AVG 90
Exterior Wall	21	STONE 10
Roof Structur	03	GABLE/HIP 100
Roof Cover	03	COMP SHNGL 100
Interior Wall	05	DRYWALL 100
Interior Floo	11	CLAY TILE 50
Interior Floo	14	CARPET 50
Air Condition	03	CENTRAL 100
Heating Type	04	AIR DUCTED 100
Bedrooms		5 100
Bathrooms		3 100
Frame	02	WOOD FRAME 100
Stories	2.	2. 100
Units		0 100
Occupancy	00	NONE 100
Quality	01	Quality Level 01
DOR CODE	0100	SINGLE FAMILY
MAP NUM		MKT AREA 04
NEIGHBORHOOD/LOC	4038.00	

AREA TYPE	TOTAL GROSS AREA	PCT OF BASE	TOT ADJ AREA	SUBAREA MARKET VALUE
BAS	1,437	100	1,437	150,114
FGR	684	55	376	39,278
FOP	114	30	34	3,552
FSP	180	40	72	7,522
FUS	2,078	100	2,078	217,076
PTO	152	5	8	836
STR	33	10	3	313
TOTALS	4,678		4,008	418,690

MARKET ADJUSTMENTS

TYPE	MDL	EFF. AREA	TOT ADJ PTS	EFF. BASE RATE	REPL. COST NEW	AYB	EYB	ECON	FNCT		NORM	% COND
0900	01	4,008	89.8128	106.65	427,453	2017	2017	0	0	0	2.05	97.95

1 SNGL FAM – 100% - 2018 Heated Area: 3515 HX Base Yr 2018

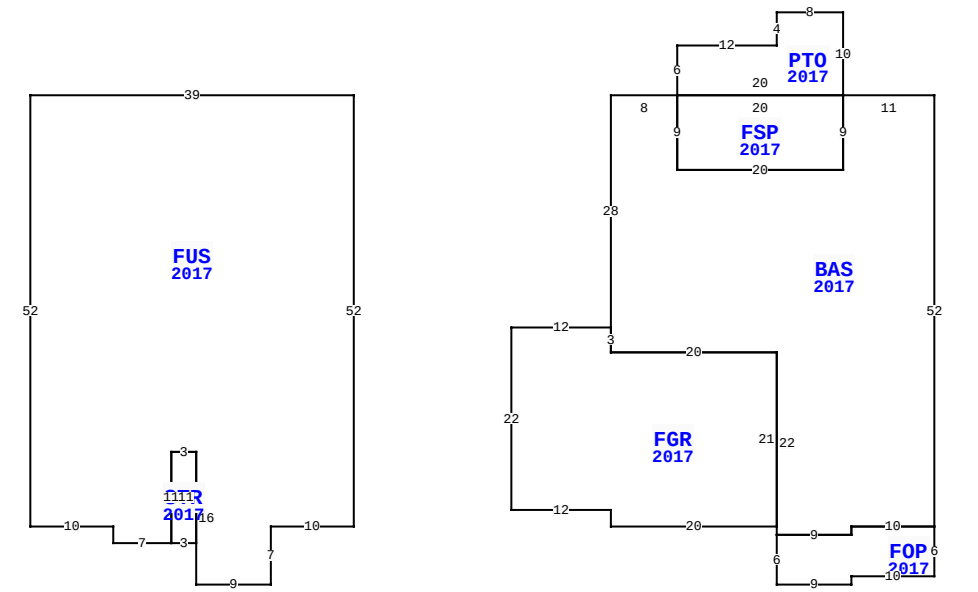

84172 SWALLOWTAIL DR, YULEE

BLD DATE		LGL DATE	
XF DATE		LAND DATE	
INC DATE		AG DATE	

VALUATION SUMMARY

VALUATION BY		STANDARD
Tax Group: 4	Tax Dist:	
BUILDING MARKET VALUE		418,690
TOTAL MARKET OB/XF VALUE		12,569
TOTAL LAND VALUE - MARKET		55,000
TOTAL MARKET VALUE		486,259
SOH/AGL Deduction		187,038
ASSESSED VALUE		299,221
TOTAL EXEMPTION VALUE	HX HB VX	55,000
BASE TAXABLE VALUE		244,221
TOTAL JUST VALUE		486,259
NCON VALUE		0
INCOME VALUE		
PREVIOUS YEAR MKT VALUE		380,632

PERMIT NUM	DESCRIPTION	AMT	ISSUED
B1632923	CO ISSUED	0	02/06/2017
B1632923	NEW CONSTR	433,124	08/25/2016

SALES DATA

OFF RECORD Number	DATE	TYPE INST	Q U	V I	RSN CD	SALE PRICE
2100/0854	2/06/2017	WD	Q	I	01	306,700
GRANTOR: DREAM FINDERS HOMES L						
GRANTEE: GAINES TIMOTHY RAY						
2062/1496	7/26/2016	WD	Q	V	05	259,000
GRANTOR: HERON ISLES JOINT VEN						
GRANTEE: DREAM FINDERS HOMES						

BUILDING NOTES

BUILDING DIMENSIONS

BAS=[YR=2017] W11 PTO=[YR=2017] N10 W8 S4 W12 S6 E20$ FSP=[YR=2017] W20 S9 E20 N9$ S9 W20 N9 W8 S28 FGR=[YR=2017] W12 S22 E12 S2 E20 N21 W20 N3$ S3 E20 S22 FOP=[YR=2017] S6 E9 N1 E10 N6 W10 S1 W9$ E9 N1 E10 N52$ PTR= W70 FUS=[YR=2017] W39 S52 E10 S2 E7 STR=[YR=2017] E3 N11 W3 S11$ N11 E3 S16 E9 N7 E10 N52$ E70$.

EXTRA FEATURES

LN	OB/XF CODE	DESCRIPTION	BLD	CAP	L	W	UNITS	UT	Adj R	ADJ UNIT PRICE	ORIG COND	YEAR ON	YEAR ACTUAL	Q	% COND	OB/XF MKT VALUE	NOTES
1	0810	CONCRETE A	0	100	9	3	27.00	SF	6.50	6.50	100	2017	2017	3	97	170	
2	0812	CONCRETE C	0	100	0	0	1,557.00	SF	4.00	4.00	100	2017	2017	3	97	6,041	
3	0470	VNYL GATE	0	100	0	0	1.00	UT	300.00	300.00	100	2017	2017	3	94	282	
4	0476	VF 6 SBPL	0	100	0	0	144.00	LF	32.00	32.00	100	2017	2017	3	94	4,332	
5	0463	FENCE GATE	0	100	0	0	1.00	UT	300.00	300.00	100	2017	2017	3	94	282	
6	0462	ST/AL FNC	0	100	42	0	168.00	SF	10.00	10.00	100	2017	2017	3	87	1,462	

LAND DESCRIPTION

TOTAL OB/XF 12,569

LN	USE CODE	CLS	LAND USE DESCRIPTION	CAP	RD	LOC ZONE	FRONT	DEPTH	TOT LND UTS	UNIT TYPE	DT	DPTH FACT	% COND	TOT ADJ	UNIT PRICE	ADJ UNIT PRICE	LAND VALUE	OTHER ADJUSTMENTS AND NOTES	YEAR	DENSITY	DECL	FRZ	YR	CONSRV
1	000134	C	SFR POND	100			0.00	0.00	1.00	LT		1.00	1.00	1.00	55,000.00	55,000.00	55,000							

REVIEW DATE 07/24/2017 BY KW Total Acres: 0.00 Total Land Value: 55,000 Market: 0 Agricultural: 0 Common: 55,000 PRINTED 08/02/2023 BY SYS