LOT 678
IN OR 2088/364
HERON ISLES PHASE THREE B

LOOR WALTER LEONARDO/TORRES-ROBLES SHARON ANNETTE
84131 SWALLOWTAIL DR
YULEE, FL 32097

2023

37-3N-28-0745-0678-0000

BUILDING CHARACTERISTICS

ELEMENT	CD	CONSTRUCTION
Exterior Wall	16	WD FR STUC 100
Roof Structur	03	GABLE/HIP 100
Roof Cover	03	COMP SHNGL 100
Interior Wall	05	DRYWALL 100
Interior Floo	11	CLAY TILE 50
Interior Floo	14	CARPET 50
Air Condition	03	CENTRAL 100
Heating Type	04	AIR DUCTED 100
Bedrooms		6 100
Bathrooms		3 100
Frame	02	WOOD FRAME 100
Stories	1.5	1.5 100
Units		0 100
Occupancy	00	NONE 100
Quality	01	Quality Level 01

DOR CODE	0100	SINGLE FAMILY	
MAP NUM		MKT AREA	04
NEIGHBORHOOD/LOC	4038.00		

AREA TYPE	TOTAL GROSS AREA	PCT OF BASE	TOT ADJ AREA	SUBAREA MARKET VALUE
BAS	2,204	100	2,204	244,894
FGR	651	55	358	39,779
FOP	50	30	15	1,666
FOP	120	30	36	4,000
FUS	470	100	470	52,224
PTO	90	5	4	444
STR	36	10	4	444
TOTALS	3,621		3,091	343,452

MARKET ADJUSTMENTS

TYPE	MDL	EFF. AREA	TOT ADJ PTS	EFF. BASE RATE	REPL. COST NEW	AYB	EYB	ECON	FNCT		NORM	% COND
0900	01	3,091	96.4620	114.55	354,074	2016	2016	0	0	0	3.00	97.00

1 SNGL FAM – 100% - 2017 Heated Area: 2674 HX Base Yr 2017

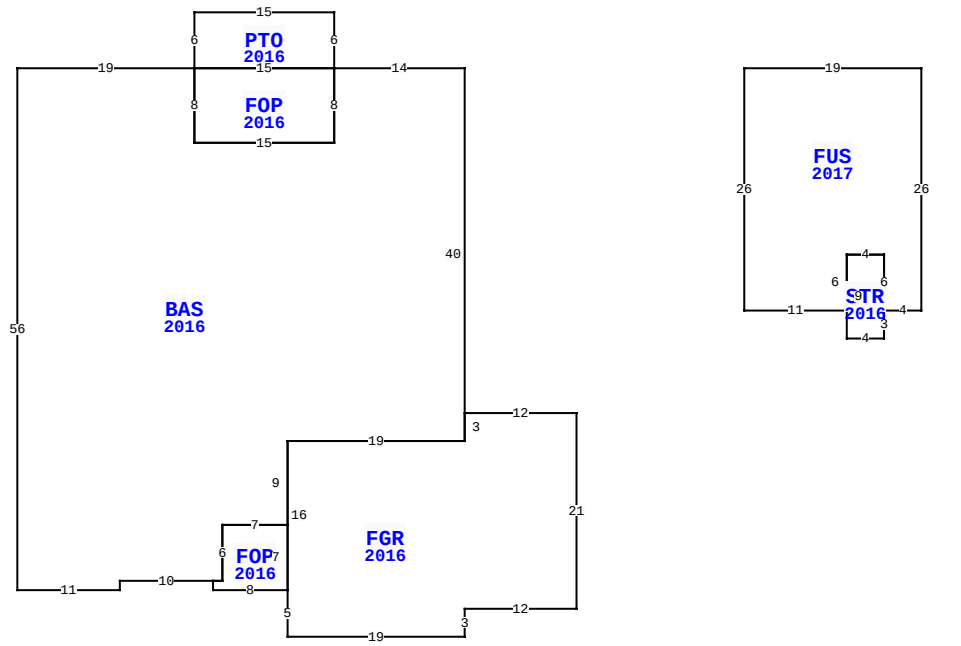

84131 SWALLOWTAIL DR, YULEE

BLD DATE		LGL DATE	
XF DATE		LAND DATE	
INC DATE		AG DATE	

NASSAU COUNTY PROPERTY

PAGE 1 of 1 4

VALUATION SUMMARY

VALUATION BY		STANDARD
Tax Group: 4	Tax Dist:	
BUILDING MARKET VALUE		343,452
TOTAL MARKET OB/XF VALUE		4,741
TOTAL LAND VALUE - MARKET		55,000
TOTAL MARKET VALUE		403,193
SOH/AGL Deduction		163,540
ASSESSED VALUE		239,653
TOTAL EXEMPTION VALUE	HX HB	50,000
BASE TAXABLE VALUE		189,653
TOTAL JUST VALUE		403,193
NCON VALUE		0
INCOME VALUE		
PREVIOUS YEAR MKT VALUE		319,004

PERMIT NUM	DESCRIPTION	AMT	ISSUED
B1632489	CO ISSUED	0	10/24/2016
B1632489	NEW CONSTR	334,551	06/10/2016

SALES DATA

OFF RECORD Number	DATE	TYPE INST	Q U	V I	RSN CD	SALE PRICE
2088/0364	10/24/2016	WD	U	I	11	100
GRANTOR: DREAM FINDERS HOMES L						
GRANTEE: LOOR WALTER LEONARD						
2080/0007	10/24/2016	WD	Q	I	01	254,000
GRANTOR: DREAM FINDERS HOMES L						
GRANTEE: LOOR WALTER LEONARD						

BUILDING NOTES

BUILDING DIMENSIONS

BAS=[YR=2016] W14 PTO=[YR=2016] N6 W15 S6 FOP=[YR=2016] S8 E15 N8 W15 $ E15 $ S8 W15N8 W19 S56 E11 N1 E10 FOP=[YR=2016] S1 E8 FGR=[YR=2016] S5 E19 N3 E12 N21 W12 S3 W19 S16 $ N7 W7 S6 W1 $ E1 N6 E7 N9 E19 N40 $ PTR= E30 FUS=[YR=2017] E19 S26 W4 STR=[YR=2016] S3 W4 N9 E4 S6 $ N6 W4 S6 W11 N26 $ W30 $.

EXTRA FEATURES

LN	OB/XF CODE	DESCRIPTION	BLD	CAP	L	W	UNITS	UT	Adj R	ADJ UNIT PRICE	ORIG COND	YEAR ON	YEAR ACTUAL	Q	% COND	OB/XF MKT VALUE	NOTES
1	0811	CONCRETE B	0	100	0	0	940.00	SF	5.20	5.20	100	2016	2016	3	97	4,741	

LAND DESCRIPTION

TOTAL OB/XF 4,741

LN	USE CODE	CLS	LAND USE DESCRIPTION	CAP	RD	LOC ZONE	FRONT	DEPTH	TOT LND UTS	UNIT TYPE	DT	DPTH FACT	% COND	TOT ADJ	UNIT PRICE	ADJ UNIT PRICE	LAND VALUE	OTHER ADJUSTMENTS AND NOTES	YEAR	DENSITY	DECL	FRZ	YR	CONSRV
1	000100	C	SFR	100			0.00	0.00	1.00	LT		1.00	1.00	1.00	55,000.00	55,000.00	55,000							

REVIEW DATE 01/31/2017 BY RK Total Acres: 0.00 Total Land Value: 55,000 Market: 0 Agricultural: 0 Common: 55,000 PRINTED 08/02/2023 BY SYS