LOT 4
IN OR 1980/470
BELLS RIVER ESTATES #3

SAVAGE DARRICK L & CATHERINE L
87276 LENTS RD
YULEE, FL 32097

2023

37-3N-27-0136-0004-0000

NASSAU COUNTY PROPERTY

BUILDING CHARACTERISTICS

ELEMENT	CD	CONSTRUCTION
Exterior Wall	16	WD FR STUC 50
Exterior Wall	17	CB STUCCO 50
Roof Structur	03	GABLE/HIP 100
Roof Cover	03	COMP SHNGL 100
Interior Wall	05	DRYWALL 100
Interior Floo	14	CARPET 70
Interior Floo	08	SHT VINYL 30
Air Condition	03	CENTRAL 100
Heating Type	04	AIR DUCTED 100
Bedrooms		4 100
Bathrooms		3 100
Frame	02	WOOD FRAME 100
Stories	2.	2. 100
Units		0 100
Occupancy	00	NONE 100
Quality	03	Quality Level 03
DOR CODE	0100	SINGLE FAMILY
MAP NUM		MKT AREA 04
NEIGHBORHOOD/LOC	4062.00	

AREA TYPE	TOTAL GROSS AREA	PCT OF BASE	TOT ADJ AREA	SUBAREA MARKET VALUE
BAS	1,351	100	1,351	110,509
FGR	409	55	225	18,405
FOP	18	30	5	409
FSP	180	40	72	5,889
FUS	1,684	100	1,684	137,747
TOTALS	3,642		3,337	272,959

MARKET ADJUSTMENTS

TYPE	MDL	EFF. AREA	TOT ADJ PTS	EFF. BASE RATE	REPL. COST NEW	AYB	EYB	ECON	FNCT		NORM	% COND
0100	01	3,337	97.9800	88.43	295,091	2007	2007	0	0	0	7.50	92.50

1 SINGLE FAM – 100% - 2016 Heated Area: 3035 HX Base Yr 2016

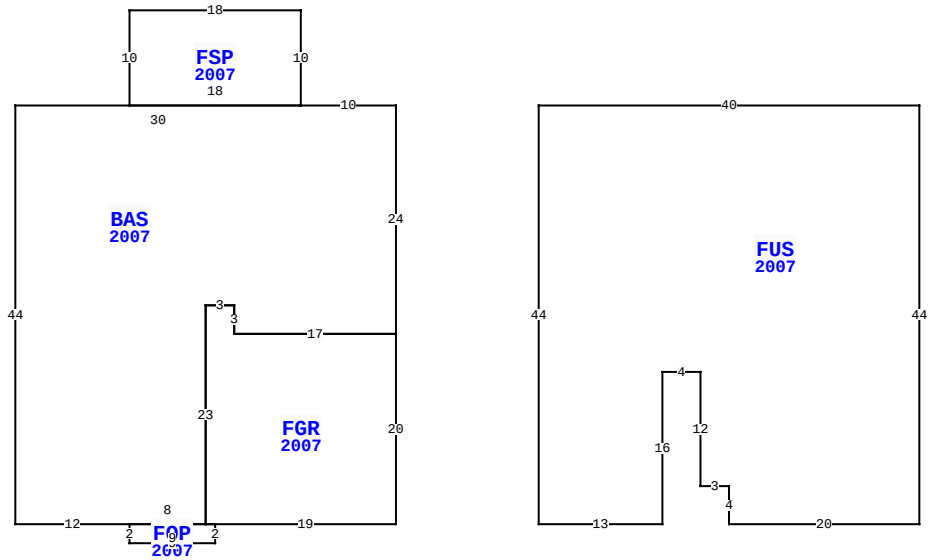

87276 LENTS RD, YULEE

BLD DATE	01/15/2008 KK	LGL DATE	
XF DATE		LAND DATE	
INC DATE		AG DATE	

VALUATION SUMMARY

VALUATION BY		STANDARD
Tax Group: 4	Tax Dist:	
BUILDING MARKET VALUE		272,959
TOTAL MARKET OB/XF VALUE		4,249
TOTAL LAND VALUE - MARKET		45,000
TOTAL MARKET VALUE		322,208
SOH/AGL Deduction		117,593
ASSESSED VALUE		204,615
TOTAL EXEMPTION VALUE	HX HB XM	50,000
BASE TAXABLE VALUE		154,615
TOTAL JUST VALUE		322,208
NCON VALUE		0
INCOME VALUE		
PREVIOUS YEAR MKT VALUE		275,119

PERMIT NUM	DESCRIPTION	AMT	ISSUED
B19670	ADDITION	3,000	03/01/2007
C17979	CO ISSUED	0	06/01/2006
M0611661	H/AC	0	06/01/2006
B0617979	NEW CONSTR	215,568	06/01/2006
E0617501	ELEC OTHER	2,000	06/01/2006
P0611239	OTHER	0	06/01/2006

SALES DATA

OFF RECORD Number	DATE	TYPE INST	Q / U	V / I	RSN CD	SALE PRICE
1980/0470	4/28/2015	WD	U	I	38	160,000
GRANTOR: MAZZOLA CHRISTIAN J &						
GRANTEE: SAVAGE DARRICK L &						
1555/1745	3/14/2008	WD	Q	I		232,900
GRANTOR: MARONDA HOMES INC						
GRANTEE: MAZZOLA CHRISTIAN J						

BUILDING NOTES

BUILDING DIMENSIONS

BAS=[YR=2007] W10 FSP=[YR=2007] N10 W18 S10 E18$ W30 S44 E12 FOP=[YR=2007] S2 E9 N2 FGR=[YR=2007] E19 N20 W17 N3 W3 S23 E1$ W9$ E8 N23 E3 S3 E17 N24$ PTR=E15 FUS=[YR=2007] E40 S44 W20 N4 W3 N12 W4 S16 W13 N44$ W15$.

EXTRA FEATURES

LN	OB/XF CODE	DESCRIPTION	BLD	CAP	L	W	UNITS	UT	Adj R	ADJ UNIT PRICE	ORIG COND	YEAR ON	YEAR ACTUAL	Q	% COND	OB/XF MKT VALUE	NOTES
1	0811	CONCRETE B	0	100	0	0	918.00	SF	5.20	5.20	100	2007	2007	3	89	4,249	

LAND DESCRIPTION

TOTAL OB/XF 4,249

LN	USE CODE	CLS	LAND USE DESCRIPTION	CAP	RD	LOC ZONE	FRONT	DEPTH	TOT LND UTS	UNIT TYPE	DT	DPTH FACT	% COND	TOT ADJ	UNIT PRICE	ADJ UNIT PRICE	LAND VALUE	OTHER ADJUSTMENTS AND NOTES	YEAR	DENSITY	DECL	FRZ	YR	CONSRV
1	000100	C	SFR	100	0003		0.00	0.00	1.00	LT		1.00	1.00	1.00	45,000.00	45,000.00	45,000							

REVIEW DATE 05/24/2018 BY SBX Total Acres: 0.00 Total Land Value: 45,000 Market: 0 Agricultural: 0 Common: 45,000 PRINTED 08/02/2023 BY SYS