LOT 25
IN OR 2051/1014
CONSERV ESMT PT OR 1299/53

PISANI PAUL
87057 KIPLING DRIVE
YULEE, FL 32097

**2023**

**37-3N-27-0134-0025-0000**

## BUILDING CHARACTERISTICS

| ELEMENT | CD | CONSTRUCTION |
|---|---|---|
| Exterior Wall | 17 | CB STUCCO 60 |
| Exterior Wall | 16 | WD FR STUC 40 |
| Roof Structur | 03 | GABLE/HIP 100 |
| Roof Cover | 03 | COMP SHNGL 100 |
| Interior Wall | 05 | DRYWALL 100 |
| Interior Floo | 14 | CARPET 70 |
| Interior Floo | 08 | SHT VINYL 30 |
| Air Condition | 03 | CENTRAL 100 |
| Heating Type | 04 | AIR DUCTED 100 |
| Bedrooms | | 4 100 |
| Bathrooms | | 2.5 100 |
| Frame | 02 | WOOD FRAME 100 |
| Stories | 2. | 2. 100 |
| Units | | 0 100 |
| Occupancy | 00 | NONE 100 |
| Quality | 03 | Quality Level 03 |
| DOR CODE | 0100 | SINGLE FAMILY |
| MAP NUM | | MKT AREA 04 |
| NEIGHBORHOOD/LOC | 4055.00 | |

| AREA TYPE | TOTAL GROSS AREA | PCT OF BASE | TOT ADJ AREA | SUBAREA MARKET VALUE |
|---|---|---|---|---|
| BAS | 1,120 | 100 | 1,120 | 96,775 |
| FGR | 651 | 55 | 358 | 30,933 |
| FOP | 21 | 30 | 6 | 519 |
| FSP | 280 | 40 | 112 | 9,677 |
| FUS | 1,112 | 100 | 1,112 | 96,084 |
| PTO | 28 | 5 | 1 | 86 |
| TOTALS | 3,212 | | 2,709 | 234,075 |

## MARKET ADJUSTMENTS

| TYPE | MDL | EFF. AREA | TOT ADJ PTS | EFF. BASE RATE | REPL. COST NEW | AYB | EYB | ECON | FNCT | | NORM | % COND |
|---|---|---|---|---|---|---|---|---|---|---|---|---|
| 0100 | 01 | 2,709 | 104.0640 | 93.92 | 254,429 | 2006 | 2006 | 0 | 0 | 0 | 8.00 | 92.00 |

1 SINGLE FAM – 100% - 2007 Heated Area: 2232 HX Base Yr 2007

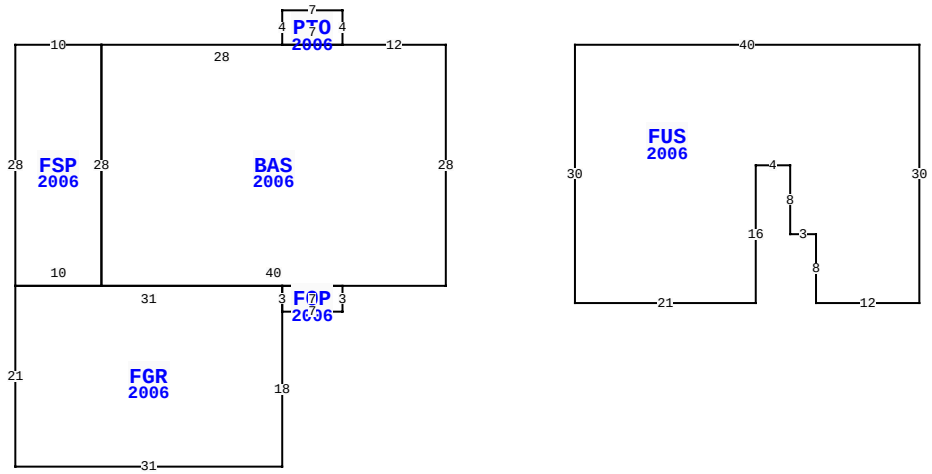


87057 KIPLING DR, YULEE

| | | | |
|---|---|---|---|
| BLD DATE | 04/04/2023 NW | LGL DATE | |
| XF DATE | | LAND DATE | |
| INC DATE | | AG DATE | |

## NASSAU COUNTY PROPERTY

PAGE 1 of 1 4

### VALUATION SUMMARY

| | | |
|---|---|---|
| VALUATION BY | | STANDARD |
| Tax Group: 4 | Tax Dist: | |
| BUILDING MARKET VALUE | | 234,075 |
| TOTAL MARKET OB/XF VALUE | | 3,928 |
| TOTAL LAND VALUE - MARKET | | 47,250 |
| TOTAL MARKET VALUE | | 285,253 |
| SOH/AGL Deduction | | 113,457 |
| ASSESSED VALUE | | 171,796 |
| TOTAL EXEMPTION VALUE | HX HB | 50,000 |
| BASE TAXABLE VALUE | | 121,796 |
| TOTAL JUST VALUE | | 285,253 |
| NCON VALUE | | 0 |
| INCOME VALUE | | |
| PREVIOUS YEAR MKT VALUE | | 264,567 |

| PERMIT NUM | DESCRIPTION | AMT | ISSUED |
|---|---|---|---|
| C15927 | CO ISSUED | 0 | 01/01/2006 |
| B15927 | NEW CONSTR | 0 | 01/01/2006 |

## SALES DATA

| OFF RECORD Number | DATE | TYPE INST | Q / U | V / I | RSN CD | SALE PRICE |
|---|---|---|---|---|---|---|
| 2051/1014 | 5/31/2016 | WD | U | I | 11 | 100 |
| GRANTOR: PISANI LINDSAY | | | | | | |
| GRANTEE: PISANI PAUL | | | | | | |
| 1458/0751 | 11/13/2006 | WD | Q | I | | 235,700 |
| GRANTOR: MARONDA HOMES INC | | | | | | |
| GRANTEE: PISANI PAUL & LINDS | | | | | | |

## BUILDING NOTES

## BUILDING DIMENSIONS

BAS=[YR=2006] W12 PTO=[YR=2006] N4 W7 S4 E7$ W28
FSP=[YR=2006] W10 S28 FGR=[YR=2006] S21 E31 N18 FOP=[YR=2006]
E7 N3 W7 S3$ N3 W31$ E10 N28$ S28 E40 N28$ PTR=E15
FUS=[YR=2006] E40 S30 W12 N8 W3 N8 W4 S16 W21 N30$ W15$.

## EXTRA FEATURES

| LN | OB/XF CODE | DESCRIPTION | BLD | CAP | L | W | UNITS | UT | Adj R | ADJ UNIT PRICE | ORIG COND | YEAR ON | YEAR ACTUAL | Q | % COND | OB/XF MKT VALUE | NOTES |
|---|---|---|---|---|---|---|---|---|---|---|---|---|---|---|---|---|---|
| 1 | 0812 | CONCRETE C | 0 | 100 | 0 | 0 | 1,116.00 | SF | 4.00 | 4.00 | 100 | 2006 | 2006 | 3 | 88 | 3,928 | |

## LAND DESCRIPTION

TOTAL OB/XF 3,928

| LN | USE CODE | CLS | LAND USE DESCRIPTION | CAP | RD | LOC ZONE | FRONT | DEPTH | TOT LND UTS | UNIT TYPE | DT | DPTH FACT | % COND | TOT ADJ | UNIT PRICE | ADJ UNIT PRICE | LAND VALUE | OTHER ADJUSTMENTS AND NOTES | YEAR | DENSITY | DECL | FRZ | YR | CONSRV |
|---|---|---|---|---|---|---|---|---|---|---|---|---|---|---|---|---|---|---|---|---|---|---|---|---|
| 1 | 000134 | C | SFR POND | 100 | 0003 | | 0.00 | 0.00 | 1.00 | LT | | 1.00 | 1.00 | 1.05 | 45,000.00 | 47,250.00 | 47,250 | | | | | | | |

REVIEW DATE 05/23/2018 BY SBX Total Acres: 0.00 Total Land Value: 47,250 Market: 0 Agricultural: 0 Common: 47,250 PRINTED 08/02/2023 BY SYS