LOT 220
IN OR 1800/304
PINEY ISLAND 1 PB 4/69

MAZZOLA JOSEPH A & TINA E
93018 MARSH LANDING
FERNANDINA BEACH, FL 32034

2023

37-2N-28-5000-0220-0000

BUILDING CHARACTERISTICS

ELEMENT	CD	CONSTRUCTION
Exterior Wall	19	COMMON BRK 100
Roof Structur	03	GABLE/HIP 100
Roof Cover	03	COMP SHNGL 100
Interior Wall	05	DRYWALL 100
Interior Floo	12	HARDWOOD 70
Interior Floo	14	CARPET 30
Air Condition	03	CENTRAL 100
Heating Type	04	AIR DUCTED 100
Bedrooms		4 100
Bathrooms		3 100
Frame	02	WOOD FRAME 100
Stories	2.	2. 100
Units		0 100
BUD4 Adjustme	30	. 100
BUD8 Adjustme	04	DIST 01 100
Occupancy	00	NONE 100
Quality	04	Quality Level 04
DOR CODE	0100	SINGLE FAMILY
MAP NUM		MKT AREA 04
NEIGHBORHOOD/LOC	4016.00	

AREA TYPE	TOTAL GROSS AREA	PCT OF BASE	TOT ADJ AREA	SUBAREA MARKET VALUE
BAS	1,200	100	1,200	165,358
BAS	600	100	600	82,679
DCK	644	10	64	8,819
DCK	728	10	73	10,059
FOP	240	30	72	9,921
FOP	240	30	72	9,921
FUS	1,200	100	1,200	165,358
UOP	64	20	13	1,791
UOP	225	20	45	6,201
TOTALS	5,141		3,339	460,109

MARKET ADJUSTMENTS

TYPE	MDL	EFF. AREA	TOT ADJ PTS	EFF. BASE RATE	REPL. COST NEW	AYB	EYB	ECON	FNCT		NORM	% COND
0900	01	3,339	150.2130	178.38	595,611	1982	1995	0	0	0	22.75	77.25

1 SNGL FAM – 100% - 2014 Heated Area: 3000 HX Base Yr 2014

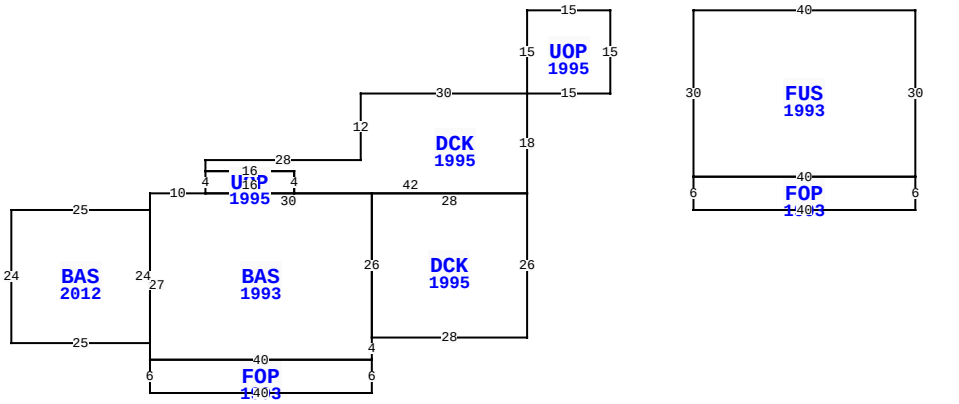

93018 MARSH LANDING, FERNANDINA BEACH

BLD DATE		LGL DATE	
XF DATE		LAND DATE	05/23/2023 MLU
INC DATE		AG DATE	

NASSAU COUNTY PROPERTY

PAGE 1 of 2 7

VALUATION SUMMARY

VALUATION BY		STANDARD
Tax Group: 7	Tax Dist:	
BUILDING MARKET VALUE		483,172
TOTAL MARKET OB/XF VALUE		10,062
TOTAL LAND VALUE - MARKET		125,000
TOTAL MARKET VALUE		618,234
SOH/AGL Deduction		211,473
ASSESSED VALUE		406,761
TOTAL EXEMPTION VALUE	HX HB VX	55,000
BASE TAXABLE VALUE		351,761
TOTAL JUST VALUE		618,234
NCON VALUE		0
INCOME VALUE		
PREVIOUS YEAR MKT VALUE		471,346

PERMIT NUM	DESCRIPTION	AMT	ISSUED
E15965	ELEC OTHER	100	10/01/2005
M10447	MECH OTHER	0	10/01/2005
R07893	REPAIR/RRF	1,100	07/01/2005
95-1715	CHNGE SRVC	0	03/01/1995
B9401463	ADDITION	12,410	12/01/1994

SALES DATA

OFF RECORD Number	DATE	TYPE INST	Q / U	V / I	RSN CD	SALE PRICE
1800/0304	6/27/2012	WD	Q	I	02	398,500
GRANTOR: KOENIG DONALD PHILIP						
GRANTEE: MAZZOLA JOSEPH A &						
1780/1443	2/28/2012	TD	U	I	30	100
GRANTOR: KOENIG DONALD PHILIP						
GRANTEE: KOENIG DONALD PHILI						

BUILDING NOTES

BUILDING DIMENSIONS

UOP=[YR=1995] W15 S15 DCK=[YR=1995] W30 S12 W28 S2
UOP=[YR=1995] S4 BAS=[YR=1993] W10 S3 BAS=[YR=2012] W25
S24 E25 N24 $ S27 FOP=[YR=1993] S6 E40 N6 W40 $ E40 N4
DCK=[YR=1995] E28 N26 W28 S26 $ N26 W30 $ E16 N4 W16 $ E16
S4 E42 N18 $ E15 N15 $ PTR= E15 FUS=[YR=1993] E40 S30
FOP=[YR=1993] S6 W40 N6 E40 $ W40 N30 $ W15 $.

EXTRA FEATURES

LN	OB/XF CODE	DESCRIPTION	BLD	CAP	L	W	UNITS	UT	Adj R	ADJ UNIT PRICE	ORIG COND	YEAR ON	YEAR ACTUAL	Q	% COND	OB/XF MKT VALUE	NOTES
1	0504	FP-ELECTRI	0	100	0	0	1.00	UT	2,000.00	2,000.00	100	1982	1982	3	54	1,080	
2	0811	CONCRETE B	0	100	0	0	1,714.00	SF	5.20	5.20	100	1982	1982	3	41	3,654	
4	0820	WOOD WALK	0	100	5	30	150.00	SF	11.75	11.75	100	1995	1995	3	40	705	
5	0811	CONCRETE B	0	100	0	0	647.00	SF	5.20	5.20	100	1996	1996	3	73	2,456	
6	0810	CONCRETE A	0	100	60	3	180.00	SF	6.50	6.50	100	1996	1996	3	73	854	
7	0810	CONCRETE A	0	100	26	2	52.00	SF	3.25	3.25	100	1996	1996	3	73	123	
8	0940	SHEDS/PORT	0	100	16	8	128.00	SF	30.00	30.00	100	2006	2006	3	31	1,190	

LAND DESCRIPTION

TOTAL OB/XF 10,062

LN	USE CODE	CLS	LAND USE DESCRIPTION	CAP	RD	LOC ZONE	FRONT	DEPTH	TOT LND UTS	UNIT TYPE	DT	DPTH FACT	% COND	TOT ADJ	UNIT PRICE	ADJ UNIT PRICE	LAND VALUE	OTHER ADJUSTMENTS AND NOTES	YEAR	DENSITY	DECL	FRZ	YR	CONSRV
1	000100	C	SFR	100		RS-1	0.00	0.00	1.00	LT		1.00	1.00	1.00	125,000.00	125,000.00	125,000							

REVIEW DATE 10/24/2018 BY DJX Total Acres: 0.00 Total Land Value: 125,000 Market: 0 Agricultural: 0 Common: 125,000 PRINTED 08/02/2023 BY SYS

LOT 220
IN OR 1800/304
PINEY ISLAND 1 PB 4/69

MAZZOLA JOSEPH A & TINA E
93018 MARSH LANDING
FERNANDINA BEACH, FL 32034

2023

37-2N-28-5000-0220-0000

BUILDING CHARACTERISTICS

ELEMENT	CD	CONSTRUCTION
Exterior Wall	05	AVERAGE 80
Exterior Wall	10	ABOVE AVG 20
Roof Structur	03	GABLE/HIP 100
Roof Cover	03	COMP SHNGL 100
Interior Wall	05	DRYWALL 100
Interior Floo	03	CONC FINSH 100
Air Condition	01	NONE 100
Heating Type	01	NONE 100
Bedrooms		0 100
Bathrooms		0 100
Frame	02	WOOD FRAME 100
Stories	1.	1. 100
Units		0 100
Occupancy	00	NONE 100
Quality	04	Quality Level 04
DOR CODE	0100	SINGLE FAMILY
MAP NUM		MKT AREA 04
NEIGHBORHOOD/LOC	4016.00	

AREA TYPE	TOTAL GROSS AREA	PCT OF BASE	TOT ADJ AREA	SUBAREA MARKET VALUE
BAS	960	100	960	23,063
TOTALS	960		960	23,063

MARKET ADJUSTMENTS

TYPE	MDL	EFF. AREA	TOT ADJ PTS	EFF. BASE RATE	REPL. COST NEW	AYB	EYB	ECON	FNCT		NORM	% COND
6500	01	960	87.9984	30.80	29,568	2006	2006	0	0	0	22.00	78.00

2 GARAGE RES – 100% - 2014 Heated Area: 960 HX Base Yr 2014

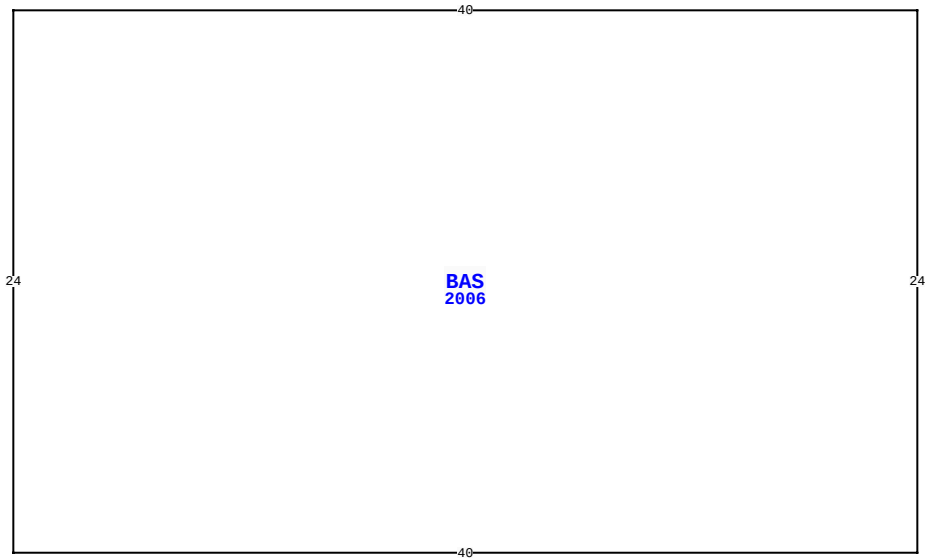

93018 MARSH LANDING, FERNANDINA BEACH

BLD DATE		LGL DATE	
XF DATE		LAND DATE	05/23/2023 MLU
INC DATE		AG DATE	

NASSAU COUNTY PROPERTY

PAGE 2 of 2 7

VALUATION SUMMARY

VALUATION BY		STANDARD
Tax Group: 7	Tax Dist:	
BUILDING MARKET VALUE		483,172
TOTAL MARKET OB/XF VALUE		10,062
TOTAL LAND VALUE - MARKET		125,000
TOTAL MARKET VALUE		618,234
SOH/AGL Deduction		211,473
ASSESSED VALUE		406,761
TOTAL EXEMPTION VALUE	HX HB VX	55,000
BASE TAXABLE VALUE		351,761
TOTAL JUST VALUE		618,234
NCON VALUE		0
INCOME VALUE		
PREVIOUS YEAR MKT VALUE		471,346

PERMIT NUM	DESCRIPTION	AMT	ISSUED

SALES DATA

OFF RECORD Number	DATE	TYPE INST	Q / U	V / I	RSN CD	SALE PRICE
1800/0304	6/27/2012	WD	Q	I	02	398,500
GRANTOR: KOENIG DONALD PHILIP						
GRANTEE: MAZZOLA JOSEPH A &						
1780/1443	2/28/2012	TD	U	I	30	100
GRANTOR: KOENIG DONALD PHILIP						
GRANTEE: KOENIG DONALD PHILI						

BUILDING NOTES

BUILDING DIMENSIONS

BAS=[YR=2006] W40 S24 E40 N24 $.

EXTRA FEATURES

L N	OB/XF CODE	DESCRIPTION	BLD	CAP	L	W	UNITS	UT	Adj R	ADJ UNIT PRICE	ORIG COND	YEAR ON	YEAR ACTUAL	Q	% COND	OB/XF MKT VALUE	NOTES

LAND DESCRIPTION

TOTAL OB/XF 0

L N	USE CODE	CLS	LAND USE DESCRIPTION	CAP	R D	LOC ZONE	FRONT	DEPTH	TOT LND UTS	UNIT TYPE	D T	DPTH FACT	% COND	TOT ADJ	UNIT PRICE	ADJ UNIT PRICE	LAND VALUE	OTHER ADJUSTMENTS AND NOTES	YEAR	DENSITY	DECL	FRZ	YR	CONSRV

REVIEW DATE 10/24/2018 BY DJX Total Acres: 0.00 Total Land Value: 125,000 Market: 0 Agricultural: 0 Common: 125,000 PRINTED 08/02/2023 BY SYS