LOT 54
PINEY ISLAND II PB 4/97

MCCOY DANIELLE MARIE & KEITH PATRICK
96102 PINEY ISLAND DR
FERNANDINA BEACH, FL 32034

2023

37-2N-28-5000-0054-0000

NASSAU COUNTY PROPERTY

BUILDING CHARACTERISTICS

ELEMENT	CD	CONSTRUCTION
Exterior Wall	20	FACE BRICK 100
Roof Structur	08	IRREGULAR 100
Roof Cover	03	COMP SHNGL 100
Interior Wall	05	DRYWALL 100
Interior Floo	11	CLAY TILE 100
Air Condition	03	CENTRAL 100
Heating Type	04	AIR DUCTED 100
Bedrooms		4 100
Bathrooms		2 100
Frame	02	WOOD FRAME 100
Stories	1.	1. 100
Units		0 100
Occupancy	00	NONE 100
Quality	04	Quality Level 04

DOR CODE 0100 SINGLE FAMILY
MAP NUM | MKT AREA 04
NEIGHBORHOOD/LOC 4016.00

AREA TYPE	TOTAL GROSS AREA	PCT OF BASE	TOT ADJ AREA	SUBAREA MARKET VALUE
BAS	1,931	100	1,931	236,884
BAS	584	100	584	71,642
FGR	682	55	375	46,003
FOP	270	30	81	9,936
PTO	506	5	25	3,067
TOTALS	3,973		2,996	367,532

MARKET ADJUSTMENTS

TYPE	MDL	EFF. AREA	TOT ADJ PTS	EFF. BASE RATE	REPL. COST NEW	AYB	EYB	ECON	FNCT		NORM	% COND
0900	01	2,996	119.4270	141.82	424,893	1997	2004	0	0	0	13.50	86.50

1 SNGL FAM – 100% - 2023 Heated Area: 2515 HX Base Yr 2023

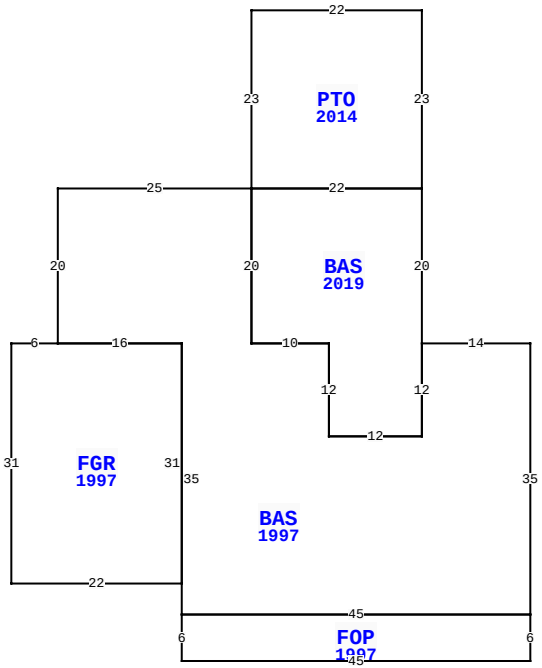

96102 PINEY ISLAND DR, FERNANDINA BEACH

BLD DATE		LGL DATE	
XF DATE		LAND DATE	05/23/2023 MLU
INC DATE		AG DATE	

VALUATION SUMMARY

VALUATION BY		STANDARD
Tax Group: 7	Tax Dist:	
BUILDING MARKET VALUE		367,532
TOTAL MARKET OB/XF VALUE		9,306
TOTAL LAND VALUE - MARKET		125,000
TOTAL MARKET VALUE		501,838
SOH/AGL Deduction		0
ASSESSED VALUE		501,838
TOTAL EXEMPTION VALUE	HX HB	50,000
BASE TAXABLE VALUE		451,838
TOTAL JUST VALUE		501,838
NCON VALUE		0
INCOME VALUE		
PREVIOUS YEAR MKT VALUE		375,421

PERMIT NUM	DESCRIPTION	AMT	ISSUED
R1703437	REPAIR/RRF	15,000	06/01/2017
B1428666	REMODEL	48,528	04/01/2014
P972214	NEW CONSTR	0	07/01/1997
973812	TEMP POLE	0	06/01/1997
973923	NEW CONSTR	128,000	05/01/1997

SALES DATA

OFF RECORD Number	DATE	TYPE INST	Q / U	V / I	RSN CD	SALE PRICE
2610/1636	12/28/2022	WD	Q	I	01	590,000
GRANTOR: COGAN TIMOTHY J & CYN						
GRANTEE: MCCOY DANIELLE MARI						
2304/0275	9/13/2019	WD	Q	I	01	369,000
GRANTOR: CONN PENELOPE P & BRA						
GRANTEE: COGAN TIMOTHY J & C						

BUILDING NOTES

BUILDING DIMENSIONS

BAS=[YR=1997] W14BAS=[YR=2019] N20 PTO=[YR=2014] N23 W22 S23 E22 $ W22 S20 E10 S12 E12 N12$ S12 W12 N12 W10 N20 W25 S20 FGR=[YR=1997] W6 S31 E22N31 W16$ E16 S35 FOP=[YR=1997] S6 E45 N6 W45$ E45 N35 $.

EXTRA FEATURES

LN	OB/XF CODE	DESCRIPTION	BLD	CAP	L	W	UNITS	UT	Adj R	ADJ UNIT PRICE	ORIG COND	YEAR ON	YEAR ACTUAL	Q	% COND	OB/XF MKT VALUE	NOTES
1	0500	FP-PRE FAB	0	100	0	0	1.00	UT	3,500.00	3,500.00	100	1997	1997	3	81	2,835	
2	0825	BRICK	0	100	30	3	90.00	SF	12.50	12.50	100	1998	1998	3	93	1,046	
3	0825	BRICK	0	100	0	0	48.00	SF	12.50	12.50	100	1998	1998	3	93	558	
4	0812	CONCRETE C	0	100	0	0	1,240.00	SF	4.00	4.00	100	2001	2001	3	82	4,067	
5	1242	WD DECK A	0	100	0	0	400.00	SF	10.00	10.00	100	2001	2001	3	20	800	

LAND DESCRIPTION

TOTAL OB/XF 9,306

LN	USE CODE	CLS	LAND USE DESCRIPTION	CAP	RD	LOC ZONE	FRONT	DEPTH	TOT LND UTS	UNIT TYPE	DT	DPTH FACT	% COND	TOT ADJ	UNIT PRICE	ADJ UNIT PRICE	LAND VALUE	OTHER ADJUSTMENTS AND NOTES	YEAR	DENSITY	DECL	FRZ	YR	CONSRV
1	000100	C	SFR	100		RS-1	0.00	0.00	1.00	LT		1.00	1.00	1.00	125,000.00	125,000.00	125,000							

REVIEW DATE 02/15/2020 BY KWA Total Acres: 0.00 Total Land Value: 125,000 Market: 0 Agricultural: 0 Common: 125,000 PRINTED 08/02/2023 BY SYS