PT TRACT A IN OR 1892/1829
BEING PARCELS A
ESMT IN OR 1822/1200

HOGAN ROBERT & ELIZABETH S
95010 PINEY ISLAND CT
FERNANDINA BEACH, FL 32034

**2023**

**37-2N-28-5000-0036-0000**

## NASSAU COUNTY PROPERTY



## BUILDING CHARACTERISTICS

| ELEMENT | CD | CONSTRUCTION |
|---|---|---|
| Exterior Wall | 17 | CB STUCCO 100 |
| Roof Structur | 08 | IRREGULAR 100 |
| Roof Cover | 03 | COMP SHNGL 80 |
| Roof Cover | 13 | STAND SEAM 20 |
| Interior Wall | 05 | DRYWALL 100 |
| Interior Floo | 03 | CONC FINSH 100 |
| Air Condition | 01 | NONE 100 |
| Heating Type | 01 | NONE 100 |
| Bedrooms | | 0 100 |
| Bathrooms | | 0 100 |
| Frame | 03 | MASONRY 100 |
| Stories | 1. | 1. 100 |
| Units | | 0 100 |
| Quality | 06 | Quality Level 06 |
| DOR CODE | 0100 | SINGLE FAMILY |
| MAP NUM | | MKT AREA 04 |
| NEIGHBORHOOD/LOC | 4016.00 | |

| AREA TYPE | TOTAL GROSS AREA | PCT OF BASE | TOT ADJ AREA | SUBAREA MARKET VALUE |
|---|---|---|---|---|
| BAS | 1,550 | 100 | 1,550 | 49,650 |
| FCP | 1,054 | 25 | 264 | 8,457 |
| STR | 42 | 10 | 4 | 128 |
| UUS | 547 | 50 | 274 | 8,777 |
| TOTALS | 3,193 | | 2,092 | 67,011 |

## MARKET ADJUSTMENTS

| TYPE | MDL | EFF. AREA | TOT ADJ PTS | EFF. BASE RATE | REPL. COST NEW | AYB | EYB | ECON | FNCT | | NORM | % COND |
|---|---|---|---|---|---|---|---|---|---|---|---|---|
| 6500 | 11 | 2,092 | 114.4130 | 40.04 | 83,764 | 2007 | 2007 | 0 | 0 | 0 | 20.00 | 80.00 |

1 GARAGE RES – 100% - 2015 Heated Area: 1550 HX Base Yr 2015

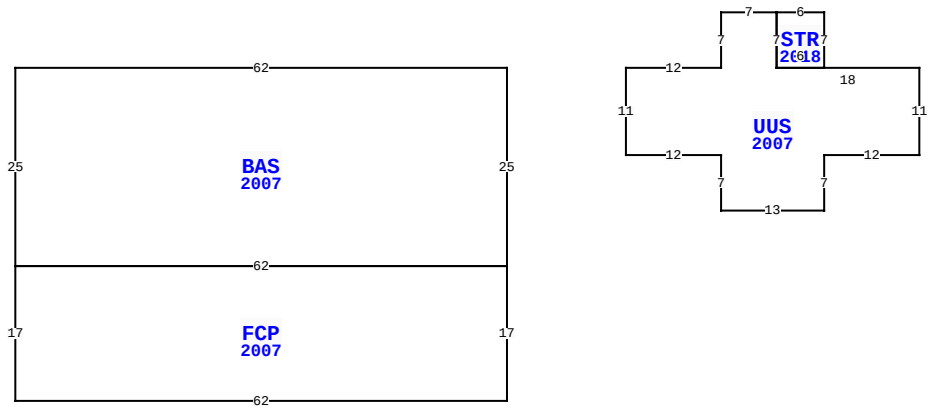


95010 N PINEY ISLAND CT, FERNANDINA BEACH

| | | | |
|---|---|---|---|
| BLD DATE | | LGL DATE | |
| XF DATE | | LAND DATE | |
| INC DATE | | AG DATE | |

## VALUATION SUMMARY

| | | |
|---|---|---|
| VALUATION BY | | STANDARD |
| Tax Group: 7 | Tax Dist: | |
| BUILDING MARKET VALUE | | 663,591 |
| TOTAL MARKET OB/XF VALUE | | 88,710 |
| TOTAL LAND VALUE - MARKET | | 175,000 |
| TOTAL MARKET VALUE | | 927,301 |
| SOH/AGL Deduction | | 228,612 |
| ASSESSED VALUE | | 698,689 |
| TOTAL EXEMPTION VALUE | HX HB | 50,000 |
| BASE TAXABLE VALUE | | 648,689 |
| TOTAL JUST VALUE | | 927,301 |
| NCON VALUE | | 0 |
| INCOME VALUE | | |
| PREVIOUS YEAR MKT VALUE | | 738,879 |

| PERMIT NUM | DESCRIPTION | AMT | ISSUED |
|---|---|---|---|
| B1807192 | SCRN ENCLSRE | 22,705 | 10/01/2018 |
| B1806518 | SWIM POOL | 51,200 | 06/25/2018 |
| B1428338 | CO ISSUED | 0 | 09/26/2014 |

## SALES DATA

| OFF RECORD Number | DATE | TYPE INST | Q / U | V / I | RSN CD | SALE PRICE |
|---|---|---|---|---|---|---|
| 1892/1829 | 12/06/2013 | WD | Q | I | 01 | 265,000 |
| GRANTOR: CHISM WAYNE R & LORIE | | | | | | |
| GRANTEE: HOGAN ROBERT & ELIZ | | | | | | |
| 1012/0235 | 10/10/2001 | WD | Q | V | | 250,000 |
| GRANTOR: SIMMONS LOU J | | | | | | |
| GRANTEE: CHISM WAYNE R & LOR | | | | | | |

## BUILDING NOTES

## BUILDING DIMENSIONS

BAS=[YR=2007] W62 S25 FCP=[YR=2007] S17 E62 N17 W62 $ E62 N25 $ PTR= E15 UUS=[YR=2007] E12 N7 E7 STR=[YR=2018] E6 S7 W6 N7$ S7 E18 S11 W12 S7 W13 N7 W12 N11$ W15 $ .

## EXTRA FEATURES

| LN | OB/XF CODE | DESCRIPTION | BLD | CAP | L | W | UNITS | UT | Adj R | ADJ UNIT PRICE | ORIG COND | YEAR ON | YEAR ACTUAL | Q | % COND | OB/XF MKT VALUE | NOTES |
|---|---|---|---|---|---|---|---|---|---|---|---|---|---|---|---|---|---|
| 1 | 0812 | CONCRETE C | 0 | 100 | 0 | 0 | 4,493.00 | SF | 4.00 | 4.00 | 100 | 2014 | 2014 | 3 | 95 | 17,073 | |
| 2 | 0855 | CONC PAVER | 0 | 100 | 0 | 0 | 1,416.00 | SF | 10.00 | 10.00 | 100 | 2014 | 2014 | 3 | 95 | 13,452 | |
| 3 | 0092 | AUTO GATE | 0 | 100 | 0 | 0 | 1.00 | UT | 3,500.00 | 3,500.00 | 100 | 2014 | 2014 | 3 | 70 | 2,450 | |
| 4 | 1127 | BRICK 8" | 0 | 100 | 0 | 0 | 305.00 | SF | 11.00 | 11.00 | 100 | 2014 | 2014 | 3 | 99 | 3,321 | |
| 5 | 0500 | FP-PRE FAB | 0 | 100 | 0 | 0 | 1.00 | UT | 3,500.00 | 3,500.00 | 100 | 2014 | 2014 | 3 | 97 | 3,395 | |
| 6 | 0861 | POOL GUNIT | 0 | 100 | 0 | 0 | 328.00 | SF | 85.00 | 85.00 | 100 | 2018 | 2018 | 3 | 90 | 25,092 | |
| 7 | 0871 | POOL HTR R | 0 | 100 | 0 | 0 | 1.00 | UT | 2,000.00 | 2,000.00 | 100 | 2018 | 2018 | 3 | 86 | 1,720 | |
| 8 | 0911 | SCRN RM A | 0 | 100 | 47 | 20 | 940.00 | SF | 17.50 | 17.50 | 100 | 2018 | 2018 | 3 | 86 | 14,147 | |
| 9 | 0855 | CONC PAVER | 0 | 100 | 87 | 4 | 348.00 | SF | 10.00 | 10.00 | 100 | 2018 | 2018 | 3 | 98 | 3,410 | |
| 10 | 0600 | SUMMER KIT | 0 | 100 | 0 | 0 | 1.00 | UT | 5,000.00 | 5,000.00 | 100 | 2020 | 2020 | 3 | 93 | 4,650 | |

TOTAL OB/XF 88,710

## LAND DESCRIPTION

| LN | USE CODE | CLS | LAND USE DESCRIPTION | CAP | RD | LOC ZONE | FRONT | DEPTH | TOT LND UTS | UNIT TYPE | DT | DPTH FACT | % COND | TOT ADJ | UNIT PRICE | ADJ UNIT PRICE | LAND VALUE | OTHER ADJUSTMENTS AND NOTES | YEAR | DENSITY | DECL | FRZ | YR | CONSRV |
|---|---|---|---|---|---|---|---|---|---|---|---|---|---|---|---|---|---|---|---|---|---|---|---|---|
| 1 | 000116 | C | SFR MARSH | 100 | | RS-1 | 0.00 | 0.00 | 1.00 | LT | | 1.00 | 1.00 | 1.00 | 175,000.00 | 175,000.00 | 175,000 | | | | | | | |

REVIEW DATE 07/14/2021 BY TWA Total Acres: 0.00 Total Land Value: 175,000 Market: 0 Agricultural: 0 Common: 175,000 PRINTED 08/02/2023 BY SYS

PT TRACT A IN OR 1892/1829
BEING PARCELS A
ESMT IN OR 1822/1200

HOGAN ROBERT & ELIZABETH S
95010 PINEY ISLAND CT
FERNANDINA BEACH, FL 32034

**2023**

**37-2N-28-5000-0036-0000**

## BUILDING CHARACTERISTICS

| ELEMENT | CD | CONSTRUCTION |
|---|---|---|
| Exterior Wall | 16 | WD FR STUC 100 |
| Roof Structur | 08 | IRREGULAR 100 |
| Roof Cover | 03 | COMP SHNGL 100 |
| Interior Wall | 05 | DRYWALL 100 |
| Interior Floo | 12 | HARDWOOD 70 |
| Interior Floo | 14 | CARPET 30 |
| Air Condition | 03 | CENTRAL 100 |
| Heating Type | 04 | AIR DUCTED 100 |
| Bedrooms | | 4 100 |
| Bathrooms | | 4.5 100 |
| Frame | 02 | WOOD FRAME 100 |
| Stories | 2. | 2. 100 |
| Units | | 0 100 |
| Occupancy | 00 | NONE 100 |
| Quality | 06 | Quality Level 06 |
| DOR CODE | 0100 | SINGLE FAMILY |
| MAP NUM | | MKT AREA 04 |
| NEIGHBORHOOD/LOC | 4016.00 | |

| AREA TYPE | TOTAL GROSS AREA | PCT OF BASE | TOT ADJ AREA | SUBAREA MARKET VALUE |
|---|---|---|---|---|
| BAS | 2,061 | 100 | 2,061 | 337,047 |
| FOP | 56 | 30 | 17 | 2,780 |
| FOP | 316 | 30 | 95 | 15,536 |
| FSP | 423 | 40 | 169 | 27,637 |
| FUS | 1,234 | 100 | 1,234 | 201,804 |
| STP | 608 | 10 | 61 | 9,975 |
| STR | 30 | 10 | 3 | 491 |
| STR | 77 | 10 | 8 | 1,308 |
| TOTALS | 4,805 | | 3,648 | 596,580 |

## MARKET ADJUSTMENTS

| TYPE | MDL | EFF. AREA | TOT ADJ PTS | EFF. BASE RATE | REPL. COST NEW | AYB | EYB | ECON | FNCT | | NORM | % COND |
|---|---|---|---|---|---|---|---|---|---|---|---|---|
| 0500 | 01 | 3,648 | 119.5425 | 170.35 | 621,437 | 2014 | 2014 | 0 | 0 | 0 | 4.00 | 96.00 |

2 SFR CUST – 100% - 2015 Heated Area: 3295 HX Base Yr 2015

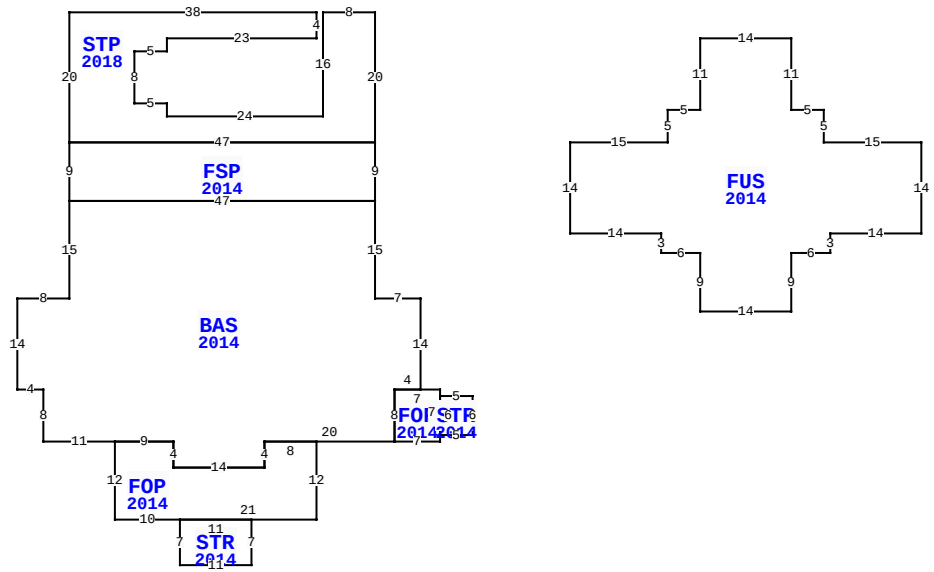


95010 N PINEY ISLAND CT, FERNANDINA BEACH

| | | | |
|---|---|---|---|
| BLD DATE | | LGL DATE | |
| XF DATE | | LAND DATE | |
| INC DATE | | AG DATE | |

## NASSAU COUNTY PROPERTY

PAGE 2 of 2 7

### VALUATION SUMMARY

| | | |
|---|---|---|
| VALUATION BY | | STANDARD |
| Tax Group: 7 | Tax Dist: | |
| BUILDING MARKET VALUE | | 663,591 |
| TOTAL MARKET OB/XF VALUE | | 88,710 |
| TOTAL LAND VALUE - MARKET | | 175,000 |
| TOTAL MARKET VALUE | | 927,301 |
| SOH/AGL Deduction | | 228,612 |
| ASSESSED VALUE | | 698,689 |
| TOTAL EXEMPTION VALUE | HX HB | 50,000 |
| BASE TAXABLE VALUE | | 648,689 |
| TOTAL JUST VALUE | | 927,301 |
| NCON VALUE | | 0 |
| INCOME VALUE | | |
| PREVIOUS YEAR MKT VALUE | | 738,879 |

| PERMIT NUM | DESCRIPTION | AMT | ISSUED |
|---|---|---|---|
| | | | |

## SALES DATA

| OFF RECORD Number | DATE | TYPE INST | Q / U | V / I | RSN CD | SALE PRICE |
|---|---|---|---|---|---|---|
| 1892/1829 | 12/06/2013 | WD | Q | I | 01 | 265,000 |
| GRANTOR: CHISM WAYNE R & LORIE | | | | | | |
| GRANTEE: HOGAN ROBERT & ELIZ | | | | | | |
| 1012/0235 | 10/10/2001 | WD | Q | V | | 250,000 |
| GRANTOR: SIMMONS LOU J | | | | | | |
| GRANTEE: CHISM WAYNE R & LOR | | | | | | |

## BUILDING NOTES

## BUILDING DIMENSIONS

STP=[YR=2018] N20 W8 S16 W24 N2 W5 N8 E5 N2 E23 N4 W38 S20 E47$ FSP=[YR=2014] W47 S9 BAS=[YR=2014] S15 W8 S14 E4 S8 E11 FOP=[YR=2014] S12 E10STR=[YR=2014] S7 E11 N7 W11 $ E21 N12 W8 S4 W14 N4 W9$ E9 S4 E14 N4 E20 FOP=[YR=2014] E7 N1 STR=[YR=2014] E5 N6 W5 S6 $ N7 W7 S8 $ N8 E4 N14 W7 N15 W47 $ E47 N9 $ PTR= E30 FUS=[YR=2014] E15 N5 E5 N11 E14 S11 E5 S5 E15 S14 W14 S3 W6 S9 W14 N9 W6 N3 W14 N14 $ W30 $.

## EXTRA FEATURES

| L N | OB/XF CODE | DESCRIPTION | BLD | CAP | L | W | UNITS | UT | Adj R | ADJ UNIT PRICE | ORIG COND | YEAR ON | YEAR ACTUAL | Q | % COND | OB/XF MKT VALUE | NOTES |
|---|---|---|---|---|---|---|---|---|---|---|---|---|---|---|---|---|---|

## LAND DESCRIPTION

TOTAL OB/XF 0

| L N | USE CODE | CLS | LAND USE DESCRIPTION | CAP | R D | LOC ZONE | FRONT | DEPTH | TOT LND UTS | UNIT TYPE | D T | DPTH FACT | % COND | TOT ADJ | UNIT PRICE | ADJ UNIT PRICE | LAND VALUE | OTHER ADJUSTMENTS AND NOTES | YEAR | DENSITY | DECL | FRZ | YR | CONSRV |
|---|---|---|---|---|---|---|---|---|---|---|---|---|---|---|---|---|---|---|---|---|---|---|---|---|

REVIEW DATE 07/14/2021 BY TWA Total Acres: 0.00 Total Land Value: 175,000 Market: 0 Agricultural: 0 Common: 175,000 PRINTED 08/02/2023 BY SYS