LOT 17 PT OF TRACT A
IN OR 759 PG 980
EMST IN OR 491/455

TEARE JOHN A/MAYER CYD S
94012 LIMPKIN LANE
FERNANDINA BEACH, FL 32034

2023

37-2N-28-5000-0017-0000

NASSAU COUNTY PROPERTY

BUILDING CHARACTERISTICS

ELEMENT	CD	CONSTRUCTION
Exterior Wall	12	CEDAR 100
Roof Structur	08	IRREGULAR 100
Roof Cover	03	COMP SHNGL 100
Interior Wall	05	DRYWALL 100
Interior Floo	11	CLAY TILE 50
Interior Floo	14	CARPET 50
Air Condition	03	CENTRAL 100
Heating Type	04	AIR DUCTED 100
Bedrooms		3 100
Bathrooms		2 100
Frame	02	WOOD FRAME 100
Stories	1.	1. 100
Units		0 100
BUD8 Adjustme	04	DIST 01 100
Occupancy	00	NONE 100
Quality	02	Quality Level 02
DOR CODE	0100	SINGLE FAMILY
MAP NUM		MKT AREA 04
NEIGHBORHOOD/LOC	4016.00	

AREA TYPE	TOTAL GROSS AREA	PCT OF BASE	TOT ADJ AREA	SUBAREA MARKET VALUE
BAS	1,713	100	1,713	195,663
BAS	120	100	120	13,707
BAS	289	100	289	33,010
FGR	625	55	344	39,293
FOP	40	30	12	1,371
TOTALS	2,787		2,478	283,044

MARKET ADJUSTMENTS

TYPE	MDL	EFF. AREA	TOT ADJ PTS	EFF. BASE RATE	REPL. COST NEW	AYB	EYB	ECON	FNCT		NORM	% COND
0900	01	2,478	108.0720	128.34	318,027	1986	2000	0	0	0	11.00	89.00

1 SNGL FAM – 100% - 1997 Heated Area: 2122 HX Base Yr 1997

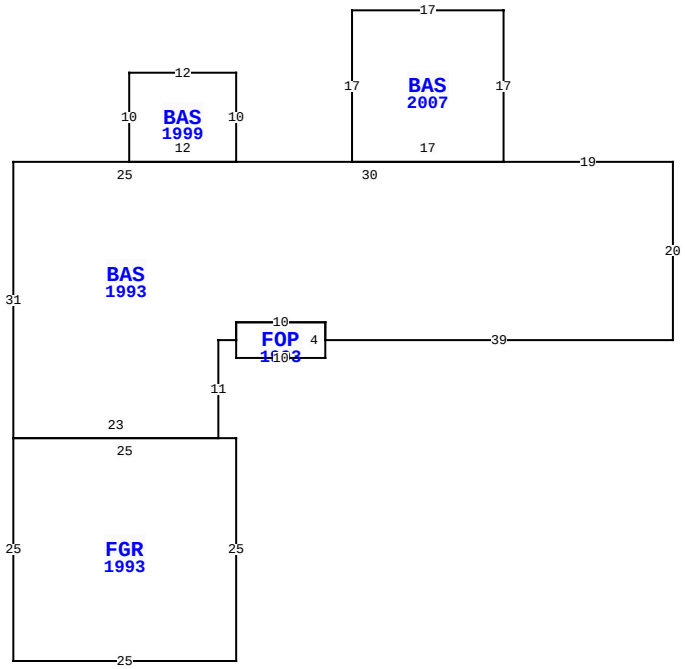

94012 LIMPKIN LN, FERNANDINA BEACH

BLD DATE	03/03/2023 NW	LGL DATE	
XF DATE		LAND DATE	
INC DATE		AG DATE	

VALUATION SUMMARY

VALUATION BY		STANDARD
Tax Group: 7	Tax Dist:	
BUILDING MARKET VALUE		283,044
TOTAL MARKET OB/XF VALUE		7,139
TOTAL LAND VALUE - MARKET		175,000
TOTAL MARKET VALUE		465,183
SOH/AGL Deduction		230,817
ASSESSED VALUE		234,366
TOTAL EXEMPTION VALUE	HX HB	50,000
BASE TAXABLE VALUE		184,366
TOTAL JUST VALUE		465,183
NCON VALUE		0
INCOME VALUE		
PREVIOUS YEAR MKT VALUE		394,195

PERMIT NUM	DESCRIPTION	AMT	ISSUED
M1702743	H/AC	0	05/01/2017
B0922970	REPAIR/RRF	1,100	10/01/2009
963048	CHNGE SRVC	300	09/01/1996
96-3170	ADDITION	17,000	08/01/1996

SALES DATA

OFF RECORD Number	DATE	TYPE INST	Q / U	V / I	RSN CD	SALE PRICE
0759/0980	5/10/1996	WD	Q	I		165,000
GRANTOR: GOAD JOHN T JR & TONI						
GRANTEE: TEARE JOHN A & MAYE						
0467/0077	9/01/1985	WD	U	V		19,000
GRANTOR:						
GRANTEE:						

BUILDING NOTES

BUILDING DIMENSIONS

BAS=[YR=1993] W19 BAS=[YR=2007] N17 W17 S17 E17 $ W30 BAS=[YR=1999] N10 W12 S10 E12 $ W25 S31 FGR=[YR=1993] S25 E25 N25 W25 $ E23 N11 E2 FOP=[YR=1993] S2 E10 N4 W10S2$ N2 E10 S2 E39 N20$.

EXTRA FEATURES

LN	OB/XF CODE	DESCRIPTION	BLD	CAP	L	W	UNITS	UT	Adj R	ADJ UNIT PRICE	ORIG COND	YEAR ON	YEAR ACTUAL	Q	% COND	OB/XF MKT VALUE	NOTES
1	0810	CONCRETE A	0	100	16	46	736.00	SF	6.50	6.50	100	1987	1987	3	54.5	2,607	
4	0500	FP-PRE FAB	0	100	0	0	1.00	UT	3,500.00	3,500.00	100	1987	1987	3	64	2,240	
5	0810	CONCRETE A	0	100	21	3	63.00	SF	6.50	6.50	100	1999	1999	3	79	324	
6	1242	WD DECK A	0	100	0	0	984.00	SF	10.00	10.00	100	1999	1999	3	20	1,968	

LAND DESCRIPTION

TOTAL OB/XF 7,139

LN	USE CODE	CLS	LAND USE DESCRIPTION	CAP	RD	LOC ZONE	FRONT	DEPTH	TOT LND UTS	UNIT TYPE	DT	DPTH FACT	% COND	TOT ADJ	UNIT PRICE	ADJ UNIT PRICE	LAND VALUE	OTHER ADJUSTMENTS AND NOTES	YEAR	DENSITY	DECL	FRZ	YR	CONSRV
1	000116	C	SFR MARSH	100		RS-1	0.00	0.00	1.00	LT		1.00	1.00	1.00	175,000.00	175,000.00	175,000							

REVIEW DATE 03/23/2022 BY KWA Total Acres: 0.00 Total Land Value: 175,000 Market: 0 Agricultural: 0 Common: 175,000 PRINTED 08/02/2023 BY SYS