LOT 12 & PT OF TRACT A
IN OR 2224/1900
ESMT OR 340/61

CASA DE SOL LLC
125 NE 32ND ST APT 2419
MIAMI, FL 33137

2023

37-2N-28-5000-0012-0000

NASSAU COUNTY PROPERTY

BUILDING CHARACTERISTICS

ELEMENT	CD	CONSTRUCTION
Exterior Wall	16	WD FR STUC 100
Roof Structur	03	GABLE/HIP 100
Roof Cover	03	COMP SHNGL 100
Interior Wall	05	DRYWALL 100
Interior Floo	12	HARDWOOD 80
Interior Floo	14	CARPET 20
Air Condition	03	CENTRAL 100
Heating Type	04	AIR DUCTED 100
Bedrooms		2 100
Bathrooms		2 100
Frame	02	WOOD FRAME 100
Stories	2.	2. 100
Units		0 100
Occupancy	00	NONE 100
Quality	04	Quality Level 04
DOR CODE	0100	SINGLE FAMILY
MAP NUM		MKT AREA 04
NEIGHBORHOOD/LOC	4016.00	

AREA TYPE	TOTAL GROSS AREA	PCT OF BASE	TOT ADJ AREA	SUBAREA MARKET VALUE
BAS	1,797	100	1,797	228,721
DCK	16	10	2	255
DCK	16	10	2	255
DCK	20	10	2	255
FCP	420	25	105	13,364
SFB	156	80	125	15,910
STR	28	10	3	382
STR	36	10	4	509
STR	40	10	4	509
UOP	96	20	19	2,418
TOTALS	3,029		2,143	272,761

MARKET ADJUSTMENTS

TYPE	MDL	EFF. AREA	TOT ADJ PTS	EFF. BASE RATE	REPL. COST NEW	AYB	EYB	ECON	FNCT		NORM	% COND
0900	01	2,143	115.2480	136.86	293,291	2008	2008	0	0	0	7.00	93.00

1 SNGL FAM – 0% - 0 Heated Area: 1922 HX Base Yr

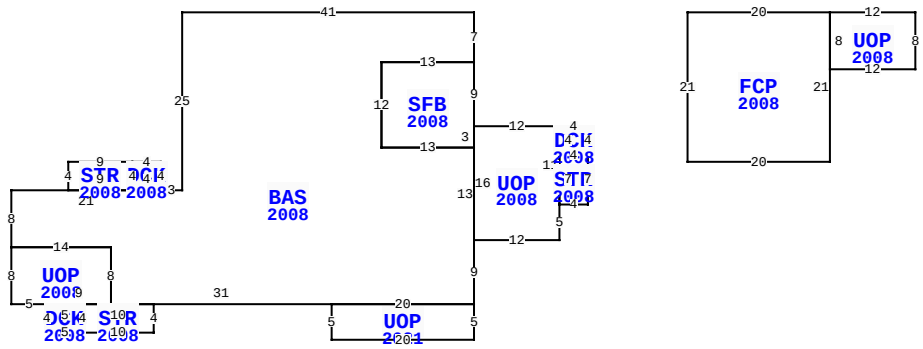

** This building has 13 Sub-Areas

96083 PINEY ISLAND DR, FERNANDINA BEACH

BLD DATE		LGL DATE	
XF DATE		LAND DATE	05/23/2023 MLU
INC DATE		AG DATE	

VALUATION SUMMARY

VALUATION BY	STANDARD
Tax Group: 7	Tax Dist:
BUILDING MARKET VALUE	272,761
TOTAL MARKET OB/XF VALUE	4,335
TOTAL LAND VALUE - MARKET	125,000
TOTAL MARKET VALUE	402,096
SOH/AGL Deduction	72,204
ASSESSED VALUE	329,892
TOTAL EXEMPTION VALUE	0
BASE TAXABLE VALUE	329,892
TOTAL JUST VALUE	402,096
NCON VALUE	0
INCOME VALUE	
PREVIOUS YEAR MKT VALUE	299,902

PERMIT NUM	DESCRIPTION	AMT	ISSUED
22100895	REMODEL	20,000	03/01/2022
M12726	TANKS/BLRS	0	02/01/2007
E17764	ELEC OTHER	872	07/01/2006
C16942	CO ISSUED	160,000	01/01/2006
R08799	REPAIR/RRF	4,100	01/01/2006
B16942	NEW CONSTR	160,000	01/01/2006

SALES DATA

OFF RECORD Number	DATE	TYPE INST	Q / U	V / I	RSN CD	SALE PRICE
2519/0713	12/01/2021	WD	Q	I	01	435,000
GRANTOR: ROACH MICHAEL J						
GRANTEE: CASA DE SOL LLC						
2224/1900	9/19/2018	WD	Q	I	01	265,000
GRANTOR: TOLAND ELLA M						
GRANTEE: ROACH MICHAEL J						

BUILDING NOTES

BUILDING DIMENSIONS

BAS=[YR=2008] W41 S25 W3 DCK=[YR=2008] N4 W4 STR=[YR=2008] W9 S4 E9 N4 $ S4 E4 $ W21 S8 UOP=[YR=2008] S8 E5 DCK=[YR=2008] S4 E5 STR=[YR=2008] E10 N4 W10 S4 $ N4 W5 $ E9 N8 W14$ E14 S8 E31 UOP=[YR=2021] S5 E20 N5 W20$ E20 N9UOP=[YR=2008] E12 N5 STR=[YR=2008] E4 N7 DCK=[YR=2008] N4 W4 S4 E4$ W4 S7 $ N11 W12 SFB=[YR=2008] N9 W13 S12 E13 N3 $ S16$ N13 W13 N12 E13 N7 $ PTR= E30 FCP=[YR=2008] E20 UOP=[YR=2008] E12 S8 W12 N8 $ S21 W20 N21 $ W30 $.

EXTRA FEATURES

LN	OB/XF CODE	DESCRIPTION	BLD	CAP	L	W	UNITS	UT	Adj R	ADJ UNIT PRICE	ORIG COND	YEAR ON	YEAR ACTUAL	Q	% COND	OB/XF MKT VALUE	NOTES
1	0500	FP-PRE FAB	0	0	0	0	1.00	UT	3,500.00	3,500.00	100	2008	2008	3	93	3,255	
2	0479	VF PICKET	0	0	0	0	120.00	LF	10.00	10.00	100	2015	2015	3	90	1,080	

LAND DESCRIPTION

TOTAL OB/XF 4,335

LN	USE CODE	CLS	LAND USE DESCRIPTION	CAP	RD	LOC ZONE	FRONT	DEPTH	TOT LND UTS	UNIT TYPE	DT	DPTH FACT	% COND	TOT ADJ	UNIT PRICE	ADJ UNIT PRICE	LAND VALUE	OTHER ADJUSTMENTS AND NOTES	YEAR	DENSITY	DECL	FRZ	YR	CONSRV
1	000100	C	SFR	0		RS-1	0.00	0.00	1.00	LT		1.00	1.00	1.00	125,000.00	125,000.00	125,000							

REVIEW DATE 05/16/2022 BY KWA Total Acres: 0.00 Total Land Value: 125,000 Market: 0 Agricultural: 0 Common: 125,000 PRINTED 08/02/2023 BY SYS