LOT 35
IN OR 1658/1664
THE VILLAGES OF MARSH LAKES #2

PARK DAVID S & PAMELA I
95304 VILLAGE DR
FERNANDINA BEACH, FL 32034-0854

2023

37-2N-28-227W-0035-0000

BUILDING CHARACTERISTICS

ELEMENT	CD	CONSTRUCTION
Exterior Wall	16	WD FR STUC 100
Roof Structur	08	IRREGULAR 100
Roof Cover	03	COMP SHNGL 100
Interior Wall	05	DRYWALL 80
Interior Wall	06	CUST PANEL 20
Interior Floo	11	CLAY TILE 60
Interior Floo	13	LVT/LAMNT 40
Air Condition	03	CENTRAL 100
Heating Type	04	AIR DUCTED 100
Bedrooms		3 100
Bathrooms		2 100
Frame	02	WOOD FRAME 100
Stories	2.	2. 100
Units		0 100
Occupancy	00	NONE 100
Quality	04	Quality Level 04
DOR CODE	0100	SINGLE FAMILY
MAP NUM		MKT AREA 04
NEIGHBORHOOD/LOC	4015.00	

AREA TYPE	TOTAL GROSS AREA	PCT OF BASE	TOT ADJ AREA	SUBAREA MARKET VALUE
BAS	1,458	100	1,458	183,485
DCK	468	10	47	5,914
FGR	476	55	262	32,972
FOP	64	30	19	2,391
FOP	76	30	23	2,895
FOP	117	30	35	4,405
FUS	859	100	859	108,103
STR	21	10	2	251
TOTALS	3,539		2,705	340,416

MARKET ADJUSTMENTS

TYPE	MDL	EFF. AREA	TOT ADJ PTS	EFF. BASE RATE	REPL. COST NEW	AYB	EYB	ECON	FNCT		NORM	% COND
0900	01	2,705	119.7504	142.20	384,651	1999	1999	0	0	0	11.50	88.50

1 SNGL FAM – 100% - 2011 Heated Area: 2317 HX Base Yr 2011

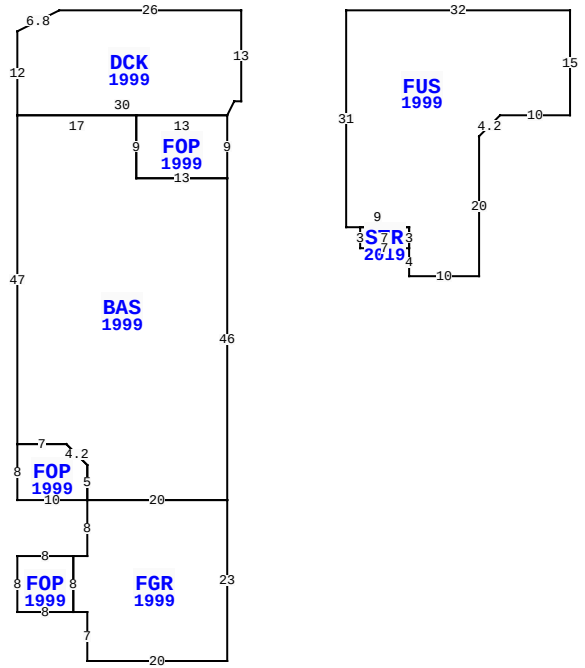

95304 VILLAGE DR, FERNANDINA BEACH

BLD DATE		LGL DATE	
XF DATE		LAND DATE	06/16/2023 MLU
INC DATE		AG DATE	

NASSAU COUNTY PROPERTY

PAGE 1 of 1 7

VALUATION SUMMARY

VALUATION BY		STANDARD
Tax Group: 7	Tax Dist:	
BUILDING MARKET VALUE		340,416
TOTAL MARKET OB/XF VALUE		21,239
TOTAL LAND VALUE - MARKET		140,000
TOTAL MARKET VALUE		501,655
SOH/AGL Deduction		242,233
ASSESSED VALUE		259,422
TOTAL EXEMPTION VALUE	HX HB	50,000
BASE TAXABLE VALUE		209,422
TOTAL JUST VALUE		501,655
NCON VALUE		0
INCOME VALUE		
PREVIOUS YEAR MKT VALUE		423,982

PERMIT NUM	DESCRIPTION	AMT	ISSUED
B1803383	REPAIR/RRF	10,000	04/01/2018
996299	NEW CONSTR	150,000	07/01/1999

SALES DATA

OFF RECORD Number	DATE	TYPE INST	Q U	V I	RSN CD	SALE PRICE
1658/1664	1/19/2010	WD	Q	I	01	320,000
GRANTOR: WRIGHT ROLAND & DEBI						
GRANTEE: PARK DAVID S & PAME						
1235/0022	6/02/2004	WD	Q	I		332,000
GRANTOR: WARNER ROBERT & KAREN						
GRANTEE: WRIGHT ROLAND & DEB						

BUILDING NOTES

EXTRA FEATURES

LN	OB/XF CODE	DESCRIPTION	BLD	CAP	L	W	UNITS	UT	Adj R	ADJ UNIT PRICE	ORIG COND	YEAR ON	YEAR ACTUAL	Q	% COND	OB/XF MKT VALUE	NOTES
1	0500	FP-PRE FAB	0	100	0	0	1.00	UT	3,500.00	3,500.00	100	1999	1999	3	84	2,940	
2	0810	CONCRETE A	0	100	24	16	384.00	SF	6.50	6.50	100	1999	1999	3	79	1,972	
3	0810	CONCRETE A	0	100	0	0	241.00	SF	6.50	6.50	100	1999	1999	3	79	1,238	
4	0300	BOAT DCK W	0	100	0	0	185.00	SF	40.00	40.00	100	2005	2005	3	44	3,256	
5	0920	CWALL-WD/M	0	100	0	0	41.00	LF	390.00	390.00	100	2015	2015	3	74	11,833	

BUILDING DIMENSIONS

DCK=[YR=1999] W26 L6 D3 S12 BAS=[YR=1999] S47 FOP=[YR=1999] S8 E10 N5 U3 L3 W7$ E7 D3 R3 S5 FGR=[YR=1999] S8 W2 FOP=[YR=1999] W8 S8 E8 N8$ S8 E2 S7 E20 N23 W20$ E20 N46 FOP=[YR=1999] N9 W13 S9 E13$ W13 N9 W17$ E30 R1 U2 E1 N13 $ PTR=E15 FUS=[YR=1999] E32 S15 W10 L3 D3 S20 W10 N4 STR=[YR=2019] W7 N3 E7 S3$ N3 W9 N31$ W15$.

LAND DESCRIPTION

TOTAL OB/XF 21,239

LN	USE CODE	CLS	LAND USE DESCRIPTION	CAP	RD	LOC ZONE	FRONT	DEPTH	TOT LND UTS	UNIT TYPE	DT	DPTH FACT	% COND	TOT ADJ	UNIT PRICE	ADJ UNIT PRICE	LAND VALUE	OTHER ADJUSTMENTS AND NOTES	YEAR	DENSITY	DECL	FRZ	YR	CONSRV
1	000133	C	SFR LAKE	100	0003	PUD	0.00	0.00	1.00	LT		1.00	1.00	1.00	140,000.00	140,000.00	140,000							

REVIEW DATE 11/14/2019 BY KWNW Total Acres: 0.00 Total Land Value: 140,000 Market: 0 Agricultural: 0 Common: 140,000 PRINTED 08/02/2023 BY SYS