LOT 34
IN OR 1956/80
THE VILLAGES OF MARSH LAKES #2

VROOMAN DAVID N/LOFTIS-VROOMAN LINDA K
89004 HARBORMASTER CT
FERNANDINA BEACH, FL 32034

2023

37-2N-28-227W-0034-0000

BUILDING CHARACTERISTICS

ELEMENT	CD	CONSTRUCTION
Exterior Wall	16	WD FR STUC 100
Roof Structur	03	GABLE/HIP 100
Roof Cover	03	COMP SHNGL 100
Interior Wall	05	DRYWALL 100
Interior Floo	14	CARPET 70
Interior Floo	12	HARDWOOD 30
Air Condition	03	CENTRAL 100
Heating Type	04	AIR DUCTED 100
Bedrooms		3 100
Bathrooms		2 100
Frame	02	WOOD FRAME 100
Stories	2.	2. 100
Units		0 100
Occupancy	00	NONE 100
Quality	04	Quality Level 04

DOR CODE	0100	SINGLE FAMILY	
MAP NUM		MKT AREA	04
NEIGHBORHOOD/LOC	4015.00		

AREA TYPE	TOTAL GROSS AREA	PCT OF BASE	TOT ADJ AREA	SUBAREA MARKET VALUE
BAS	1,428	100	1,428	170,049
FGR	472	55	260	30,961
FOP	47	30	14	1,667
FOP	100	30	30	3,572
FOP	143	30	43	5,120
FUS	546	100	546	65,019
UOP	462	20	92	10,956
TOTALS	3,198		2,413	287,345

MARKET ADJUSTMENTS

TYPE	MDL	EFF. AREA	TOT ADJ PTS	EFF. BASE RATE	REPL. COST NEW	AYB	EYB	ECON	FNCT		NORM	% COND
0900	01	2,413	112.6755	133.80	322,859	2000	2000	0	0	0	11.00	89.00

1 SNGL FAM – 100% - 2015 Heated Area: 1974 HX Base Yr 2015

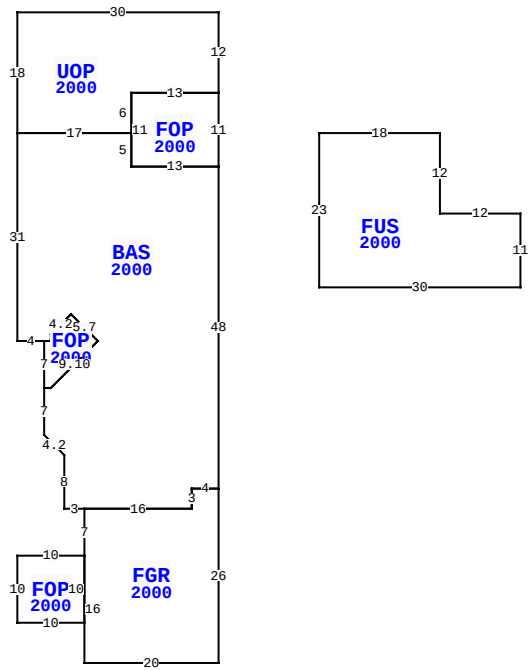

89004 HARBORMASTER CT, FERNANDINA BEACH

BLD DATE		LGL DATE	
XF DATE		LAND DATE	06/16/2023 MLU
INC DATE		AG DATE	

NASSAU COUNTY PROPERTY

PAGE 1 of 1 7

VALUATION SUMMARY

VALUATION BY		STANDARD
Tax Group: 7	Tax Dist:	
BUILDING MARKET VALUE		287,345
TOTAL MARKET OB/XF VALUE		8,545
TOTAL LAND VALUE - MARKET		140,000
TOTAL MARKET VALUE		435,890
SOH/AGL Deduction		207,999
ASSESSED VALUE		227,891
TOTAL EXEMPTION VALUE	HX HB	50,000
BASE TAXABLE VALUE		177,891
TOTAL JUST VALUE		435,890
NCON VALUE		0
INCOME VALUE		
PREVIOUS YEAR MKT VALUE		375,835

PERMIT NUM	DESCRIPTION	AMT	ISSUED
B2106444	(1) DOOR	3,637	05/19/2021
R1911273	REPAIR/RRF	10,450	10/28/2019
006991	ADDITION	5,256	03/01/2000
996353	NEW CONSTR	95,000	08/01/1999

SALES DATA

OFF RECORD Number	DATE	TYPE INST	Q / U	V / I	RSN CD	SALE PRICE
1956/0080	12/30/2014	QC	U	I	11	100
GRANTOR: LOFTIS-VROOMAN LINDA						
GRANTEE: VROOMAN DAVID N & L						
1342/1762	8/18/2005	WD	Q	I		350,000
GRANTOR: POWELL LINDA R						
GRANTEE: LOFTIS-VROOMAN LIND						

BUILDING NOTES

BUILDING DIMENSIONS

UOP=[YR=2000] W30 S18 BAS=[YR=2000] S31 E4 FOP=[YR=2000] S7 E1 U7 R7 U4 L4 D3 L3 S1 W1$ E1 N1 U3 R3 D4 R4 D7 L7 W1 S7 R3 D3 S8 E3 FGR=[YR=2000] S7 FOP=[YR=2000] W10 S10 E10 N10 $ S16 E20 N26 W4 S3 W16$ E16 N3 E4 N48 FOP=[YR=2000] N11 W13 S11 E13$ W13 N5 W17 $ E17 N6 E13 N12$ PTR= E15 S18 FUS=[YR=2000] E18 S12 E12 S11 W30 N23 $ N18 W15 $.

EXTRA FEATURES

LN	OB/XF CODE	DESCRIPTION	BLD	CAP	L	W	UNITS	UT	Adj R	ADJ UNIT PRICE	ORIG COND	YEAR ON	YEAR ACTUAL	Q	% COND	OB/XF MKT VALUE	NOTES
1	0500	FP-PRE FAB	0	100	0	0	1.00	UT	3,500.00	3,500.00	100	2000	2000	3	85	2,975	
2	0811	CONCRETE B	0	100	0	0	601.00	SF	5.20	5.20	100	2000	2000	3	80	2,500	
3	0300	BOAT DCK W	0	100	0	0	156.00	SF	40.00	40.00	100	2000	2000	3	29	1,810	
4	0911	SCRN RM A	0	100	30	12	360.00	SF	17.50	17.50	100	2000	2000	3	20	1,260	

LAND DESCRIPTION

TOTAL OB/XF 8,545

LN	USE CODE	CLS	LAND USE DESCRIPTION	CAP	RD	LOC ZONE	FRONT	DEPTH	TOT LND UTS	UNIT TYPE	DT	DPTH FACT	% COND	TOT ADJ	UNIT PRICE	ADJ UNIT PRICE	LAND VALUE	OTHER ADJUSTMENTS AND NOTES	YEAR	DENSITY	DECL	FRZ	YR	CONSRV
1	000133	C	SFR LAKE	100		PUD	0.00	0.00	1.00	LT		1.00	1.00	1.00	140,000.00	140,000.00	140,000							

REVIEW DATE 05/19/2021 BY KWX Total Acres: 0.00 Total Land Value: 140,000 Market: 0 Agricultural: 0 Common: 140,000 PRINTED 08/02/2023 BY SYS