PT OF LOT 43A & PT LOT 43B
IN OR 1990/1184
THE VILLAGE @ MARSH LAKES

KIGHT RYAN S & KATHLEEN K
91029 TEAL CT
FERNANDINA BEACH, FL 32034-1117

2023

37-2N-28-227V-043A-0000

NASSAU COUNTY PROPERTY

BUILDING CHARACTERISTICS

ELEMENT	CD	CONSTRUCTION
Exterior Wall	31	HARDIE BRD 100
Roof Structur	08	IRREGULAR 100
Roof Cover	03	COMP SHNGL 100
Interior Wall	05	DRYWALL 100
Interior Floo	14	CARPET 80
Interior Floo	08	SHT VINYL 20
Air Condition	03	CENTRAL 100
Heating Type	04	AIR DUCTED 100
Bedrooms		4 100
Bathrooms		3.5 100
Frame	02	WOOD FRAME 100
Stories	2.	2. 100
Units		0 100
Occupancy	00	NONE 100
Quality	03	Quality Level 03
DOR CODE	0100	SINGLE FAMILY
MAP NUM		MKT AREA 04
NEIGHBORHOOD/LOC	4015.0100	

AREA TYPE	TOTAL GROSS AREA	PCT OF BASE	TOT ADJ AREA	SUBAREA MARKET VALUE
BAS	1,252	100	1,252	110,644
FGR	570	55	314	27,750
FOP	124	30	37	3,270
FOP	280	30	84	7,423
FUS	287	100	287	25,363
FUS	772	100	772	68,224
TOTALS	3,285		2,746	242,675

MARKET ADJUSTMENTS

TYPE	MDL	EFF. AREA	TOT ADJ PTS	EFF. BASE RATE	REPL. COST NEW	AYB	EYB	ECON	FNCT		NORM	% COND
0320	01	2,746	108.4800	103.06	283,003	1993	1993	0	0	0	14.25	85.75

1 TOWNHOUSE - 100% - 2013 Heated Area: 2311 HX Base Yr 2013

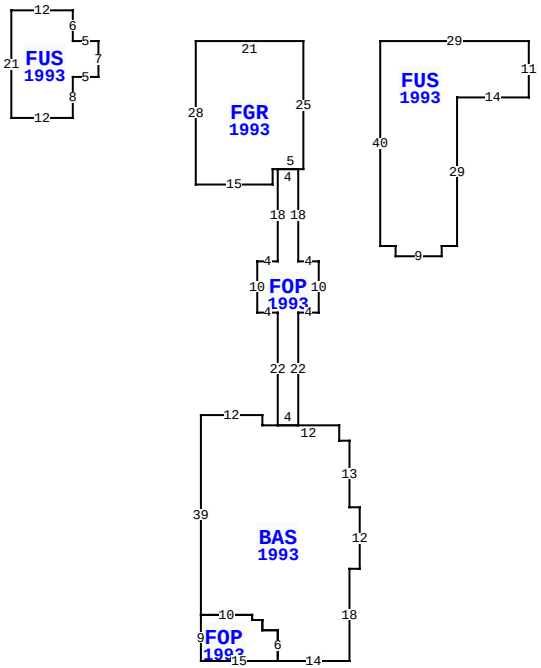

91029 TEAL CT, FERNANDINA BEACH

BLD DATE		LGL DATE	
XF DATE		LAND DATE	
INC DATE		AG DATE	

VALUATION SUMMARY

VALUATION BY		STANDARD
Tax Group: 7	Tax Dist:	
BUILDING MARKET VALUE		242,675
TOTAL MARKET OB/XF VALUE		5,400
TOTAL LAND VALUE - MARKET		93,500
TOTAL MARKET VALUE		341,575
SOH/AGL Deduction		161,325
ASSESSED VALUE		180,250
TOTAL EXEMPTION VALUE	HX HB VX	55,000
BASE TAXABLE VALUE		125,250
TOTAL JUST VALUE		341,575
NCON VALUE		0
INCOME VALUE		
PREVIOUS YEAR MKT VALUE		316,899

PERMIT NUM	DESCRIPTION	AMT	ISSUED
93-365	NEW CONSTR	74,963	07/01/1993

SALES DATA

OFF RECORD Number	DATE	TYPE INST	Q U	V I	RSN CD	SALE PRICE
1990/1184	7/06/2015	WD	U	I	11	100
GRANTOR: PHYLLIS G LAWSON REVO						
GRANTEE: KIGHT RYAN S & KATH						
1212/1725	3/04/2004	TD	Q	I		245,000
GRANTOR: LAWSON PHYLLIS G TRUS						
GRANTEE: KIGHT RYAN & KATHLE						

BUILDING NOTES

BUILDING DIMENSIONS

FGR=[YR=1993] W21 S28 E15 N3 E1 FOP=[YR=1993] S18 W4 S10 E4 S22 BAS=[YR=1993] W3 N2 W12 S39 FOP=[YR=1993] S9 E15 N6 W3 N2 W2 N1 W10 $ E10 S1 E2 S2 E3 S6 E14 N18 E2 N12 W2 N13 W2 N3 W12 $ E4 N22 E4 N10 W4 N18 W4 $ E5 N25 $ PTR= E15
FUS=[YR=1993] E29 S11 W14 S29 W3 S2 W9 N2 W3 N40 $ W15 $ PTR= W40 FUS=[YR=1993] W5 N6 W12 S21 E12 N8 E5 N7 $ E40 $.

EXTRA FEATURES

LN	OB/XF CODE	DESCRIPTION	BLD	CAP	L	W	UNITS	UT	Adj R	ADJ UNIT PRICE	ORIG COND	YEAR ON	YEAR ACTUAL	Q	% COND	OB/XF MKT VALUE	NOTES
1	0500	FP-PRE FAB	0	100	0	0	1.00	UT	3,500.00	3,500.00	100	1993	1993	3	76	2,660	
2	0811	CONCRETE B	0	100	0	0	640.00	SF	5.20	5.20	100	1993	1993	3	68	2,263	
3	0810	CONCRETE A	0	100	36	3	108.00	SF	6.50	6.50	100	1993	1993	3	68	477	

LAND DESCRIPTION

TOTAL OB/XF 5,400

LN	USE CODE	CLS	LAND USE DESCRIPTION	CAP	RD	LOC ZONE	FRONT	DEPTH	TOT LND UTS	UNIT TYPE	DT	DPTH FACT	% COND	TOT ADJ	UNIT PRICE	ADJ UNIT PRICE	LAND VALUE	OTHER ADJUSTMENTS AND NOTES	YEAR	DENSITY	DECL	FRZ	YR	CONSRV
1	000100	C	SFR	100		RS-1	0.00	0.00	1.00	LT		1.00	1.00	1.10	85,000.00	93,500.00	93,500							

REVIEW DATE 10/17/2018 BY DJX Total Acres: 0.00 Total Land Value: 93,500 Market: 0 Agricultural: 0 Common: 93,500 PRINTED 08/02/2023 BY SYS