LOT 42A
IN OR 2006/1665
THE VILLAGE @ MARSH LAKES

MCGRATH EILEEN
91030 TEAL COURT
FERNANDINA BEACH, FL 32034

2023

37-2N-28-227V-042A-0000

NASSAU COUNTY PROPERTY

BUILDING CHARACTERISTICS

ELEMENT	CD	CONSTRUCTION
Exterior Wall	31	HARDIE BRD 100
Roof Structur	08	IRREGULAR 100
Roof Cover	03	COMP SHNGL 100
Interior Wall	05	DRYWALL 100
Interior Floo	11	CLAY TILE 80
Interior Floo	14	CARPET 20
Air Condition	03	CENTRAL 100
Heating Type	04	AIR DUCTED 100
Bedrooms		3 100
Bathrooms		2.5 100
Frame	02	WOOD FRAME 100
Stories	2.	2. 100
Units		0 100
Occupancy	00	NONE 100
Quality	03	Quality Level 03

DOR CODE	0100	SINGLE FAMILY	
MAP NUM		MKT AREA	04
NEIGHBORHOOD/LOC	4015.0100		

AREA TYPE	TOTAL GROSS AREA	PCT OF BASE	TOT ADJ AREA	SUBAREA MARKET VALUE
BAS	1,495	100	1,495	147,783
FGR	465	55	256	25,306
FOP	101	30	30	2,966
FOP	133	30	40	3,954
FUS	276	100	276	27,283
TOTALS	2,470		2,097	207,292

MARKET ADJUSTMENTS

TYPE	MDL	EFF. AREA	TOT ADJ PTS	EFF. BASE RATE	REPL. COST NEW	AYB	EYB	ECON	FNCT		NORM	% COND
0320	01	2,097	119.9520	113.95	238,953	1995	1995	0	0	0	13.25	86.75

1 TOWNHOUSE - 100% - 2016 Heated Area: 1771 HX Base Yr 2016

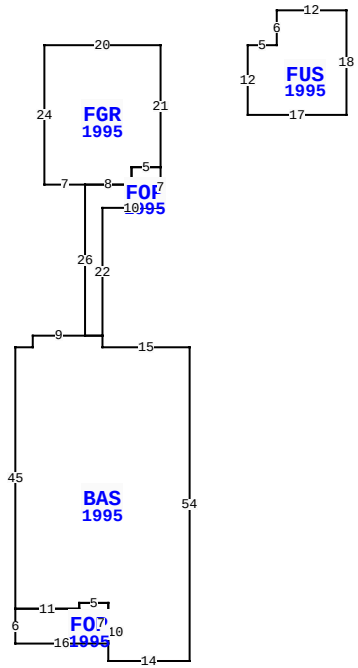

91030 TEAL CT, FERNANDINA BEACH

BLD DATE		LGL DATE	
XF DATE		LAND DATE	
INC DATE		AG DATE	

VALUATION SUMMARY

VALUATION BY		STANDARD
Tax Group: 7	Tax Dist:	
BUILDING MARKET VALUE		207,292
TOTAL MARKET OB/XF VALUE		6,112
TOTAL LAND VALUE - MARKET		85,000
TOTAL MARKET VALUE		298,404
SOH/AGL Deduction		149,332
ASSESSED VALUE		149,072
TOTAL EXEMPTION VALUE	HX HB	50,000
BASE TAXABLE VALUE		99,072
TOTAL JUST VALUE		298,404
NCON VALUE		0
INCOME VALUE		
PREVIOUS YEAR MKT VALUE		272,492

PERMIT NUM	DESCRIPTION	AMT	ISSUED

SALES DATA

OFF RECORD Number	DATE	TYPE INST	Q / U	V / I	RSN CD	SALE PRICE
2006/1665	9/30/2015	WD	Q	I	02	200,000
GRANTOR: WILDES GWEN A						
GRANTEE: MCGRATH EILEEN						
0723/1021	2/07/1995	WD	Q	I		117,900
GRANTOR: TREVETT HOMES INC						
GRANTEE: WILDES GWEN A						

BUILDING NOTES

BUILDING DIMENSIONS

FGR=[YR=1995] W20 S24 E7 FOP=[YR=1995] S26 BAS=[YR=1995] W9 S2 W3 S45 FOP=[YR=1995] S6 E16 N7 W5 S1 W11 $ E11 N1 E5 S10 E14 N54 W15 N2 W3 $ E3 N22 E10 N7 W5 S3 W8 $ E8 N3 E5 N21 $ PTR= E15 FUS=[YR=1995] E5 N6 E12 S18 W17 N12 $ W15 $.

EXTRA FEATURES

LN	OB/XF CODE	DESCRIPTION	BLD	CAP	L	W	UNITS	UT	Adj R	ADJ UNIT PRICE	ORIG COND	YEAR ON	YEAR ACTUAL	Q	% COND	OB/XF MKT VALUE	NOTES
1	0500	FP-PRE FAB	0	100	0	0	1.00	UT	3,500.00	3,500.00	100	1995	1995	3	79	2,765	
2	0811	CONCRETE B	0	100	0	0	894.00	SF	5.20	5.20	100	1995	1995	3	72	3,347	

LAND DESCRIPTION

TOTAL OB/XF 6,112

LN	USE CODE	CLS	LAND USE DESCRIPTION	CAP	RD	LOC ZONE	FRONT	DEPTH	TOT LND UTS	UNIT TYPE	DT	DPTH FACT	% COND	TOT ADJ	UNIT PRICE	ADJ UNIT PRICE	LAND VALUE	OTHER ADJUSTMENTS AND NOTES	YEAR	DENSITY	DECL	FRZ	YR	CONSRV
1	000100	C	SFR	100		RS-1	0.00	0.00	1.00	LT		1.00	1.00	1.00	85,000.00	85,000.00	85,000							

REVIEW DATE 10/17/2018 BY DJX Total Acres: 0.00 Total Land Value: 85,000 Market: 0 Agricultural: 0 Common: 85,000 PRINTED 08/02/2023 BY SYS