LOT 41A
IN OR 1929/655
THE VILLAGES OF MARSH LAKES PB

DAVIS JULIE M LVG TRUST/DAVIS JULIE M TRUSTEE
91024 TEAL CT
FERNANDINA BEACH, FL 32034

2023

37-2N-28-227V-041A-0000

BUILDING CHARACTERISTICS

ELEMENT	CD	CONSTRUCTION
Exterior Wall	31	HARDIE BRD 100
Roof Structur	08	IRREGULAR 100
Roof Cover	03	COMP SHNGL 100
Interior Wall	05	DRYWALL 100
Interior Floo	14	CARPET 80
Interior Floo	08	SHT VINYL 20
Air Condition	03	CENTRAL 100
Heating Type	04	AIR DUCTED 100
Bedrooms		3 100
Bathrooms		2.5 100
Frame	02	WOOD FRAME 100
Stories	2.	2. 100
Units		0 100
Occupancy	00	NONE 100
Quality	03	Quality Level 03
DOR CODE	0100	SINGLE FAMILY
MAP NUM		MKT AREA 04
NEIGHBORHOOD/LOC	4015.0100	

AREA TYPE	TOTAL GROSS AREA	PCT OF BASE	TOT ADJ AREA	SUBAREA MARKET VALUE
BAS	1,241	100	1,241	111,894
FGR	465	55	256	23,082
FOP	39	30	12	1,082
FOP	135	30	40	3,607
FUS	772	100	772	69,606
UST	287	45	129	11,631
TOTALS	2,939		2,450	220,902

MARKET ADJUSTMENTS

TYPE	MDL	EFF. AREA	TOT ADJ PTS	EFF. BASE RATE	REPL. COST NEW	AYB	EYB	ECON	FNCT		NORM	% COND
0320	01	2,450	108.7800	103.34	253,183	1996	1996	0	0	0	12.75	87.25

1 TOWNHOUSE - 100% - 2022 Heated Area: 2013 HX Base Yr 2022

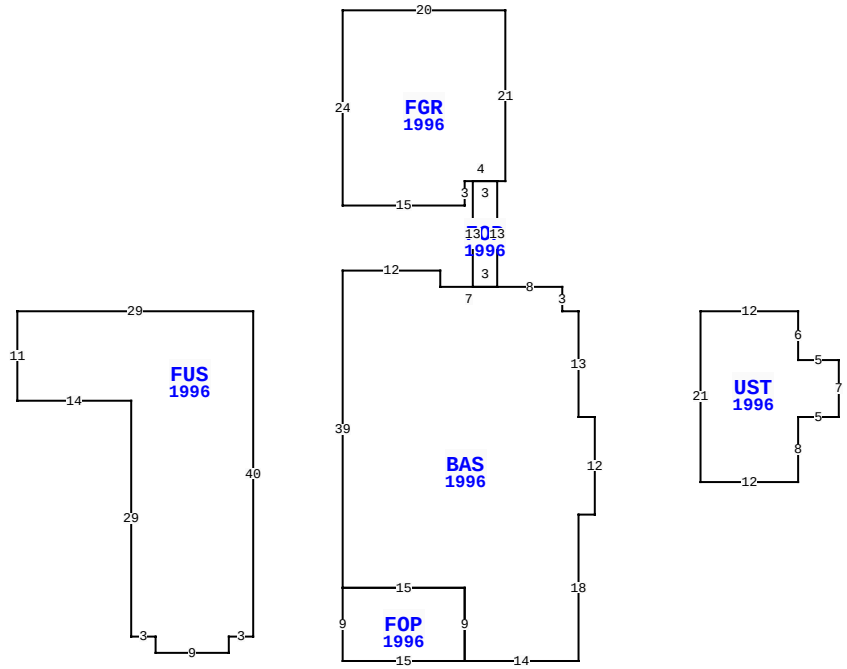

91024 TEAL CT, FERNANDINA BEACH

BLD DATE		LGL DATE	
XF DATE		LAND DATE	
INC DATE		AG DATE	

NASSAU COUNTY PROPERTY

PAGE 1 of 1 7

VALUATION SUMMARY

VALUATION BY		STANDARD
Tax Group: 7	Tax Dist:	
BUILDING MARKET VALUE		220,902
TOTAL MARKET OB/XF VALUE		4,655
TOTAL LAND VALUE - MARKET		85,000
TOTAL MARKET VALUE		310,557
SOH/AGL Deduction		66,242
ASSESSED VALUE		244,315
TOTAL EXEMPTION VALUE	HX HB	50,000
BASE TAXABLE VALUE		194,315
TOTAL JUST VALUE		310,557
NCON VALUE		0
INCOME VALUE		
PREVIOUS YEAR MKT VALUE		285,060

PERMIT NUM	DESCRIPTION	AMT	ISSUED

SALES DATA

OFF RECORD Number	DATE	TYPE INST	Q / U	V / I	RSN CD	SALE PRICE
1929/0655	7/21/2014	QC	U	I	11	100
GRANTOR: DAVIES JULIE M						
GRANTEE: DAVIES JULIE M TRUS						
0772/0731	9/30/1996	WD	Q	I		127,500
GRANTOR: TREVETT HOMES INC						
GRANTEE: DAVIS JULIE MICHELE						

BUILDING NOTES

BUILDING DIMENSIONS

BAS=[YR=1996;ORIG=0,0] W2 N3 W8 W7 N2 W12 S39 E15 S9 E14 N18 E2 N12 W2 N13 $
FUS=[YR=1996;ORIG=-40,0] W29 S11 E14 S29 E3 S2 E9 N2 E3 N40 $
FGR=[YR=1996;ORIG=-10,-16] E1 N21 W20 S24 E15 N3 E4 $
UST=[YR=1996;ORIG=15,0] E12 S6 E5 S7 W5 S8 W12 N21 $
FOP=[YR=1996;ORIG=-29,34] S9 E15 N9 W15 $
FOP=[YR=1996;ORIG=-10,-3] N13 W3 S13 E3 $
PTR=[ORIG=0,0] E15 W15 $
PTR=[ORIG=0,0] W40 E40 $
.

EXTRA FEATURES

LN	OB/XF CODE	DESCRIPTION	BLD	CAP	L	W	UNITS	UT	Adj R	ADJ UNIT PRICE	ORIG COND	YEAR ON	YEAR ACTUAL	Q	% COND	OB/XF MKT VALUE	NOTES
1	0500	FP-PRE FAB	0	100	0	0	1.00	UT	3,500.00	3,500.00	100	1996	1996	3	80	2,800	
2	0810	CONCRETE A	0	100	0	0	391.00	SF	6.50	6.50	100	1996	1996	3	73	1,855	

LAND DESCRIPTION

TOTAL OB/XF 4,655

LN	USE CODE	CLS	LAND USE DESCRIPTION	CAP	RD	LOC ZONE	FRONT	DEPTH	TOT LND UTS	UNIT TYPE	DT	DPTH FACT	% COND	TOT ADJ	UNIT PRICE	ADJ UNIT PRICE	LAND VALUE	OTHER ADJUSTMENTS AND NOTES	YEAR	DENSITY	DECL	FRZ	YR	CONSRV
1	000100	C	SFR	100		RS-1	0.00	0.00	1.00	LT		1.00	1.00	1.00	85,000.00	85,000.00	85,000							

REVIEW DATE 10/18/2018 BY DJX Total Acres: 0.00 Total Land Value: 85,000 Market: 0 Agricultural: 0 Common: 85,000 PRINTED 08/02/2023 BY SYS