LOT 7A
IN OR 1953/692
THE VILLAGE @ MARSH LAKES

SAPP JUDY H
95184 VILLAGE DRIVE
FERNANDINA BEACH, FL 32034

2023

37-2N-28-227V-007A-0000

BUILDING CHARACTERISTICS

ELEMENT	CD	CONSTRUCTION
Exterior Wall	31	HARDIE BRD 100
Roof Structur	08	IRREGULAR 100
Roof Cover	03	COMP SHNGL 100
Interior Wall	05	DRYWALL 100
Interior Floo	14	CARPET 80
Interior Floo	08	SHT VINYL 20
Air Condition	03	CENTRAL 100
Heating Type	04	AIR DUCTED 100
Bedrooms		3 100
Bathrooms		2.5 100
Frame	02	WOOD FRAME 100
Stories	2.	2. 100
Units		0 100
Occupancy	00	NONE 100
Quality	03	Quality Level 03
DOR CODE	0100	SINGLE FAMILY
MAP NUM		MKT AREA 04
NEIGHBORHOOD/LOC	4015.0100	

AREA TYPE	TOTAL GROSS AREA	PCT OF BASE	TOT ADJ AREA	SUBAREA MARKET VALUE
BAS	1,164	100	1,164	104,682
FGR	320	55	176	15,829
FOP	28	30	8	719
FUS	806	100	806	72,486
TOTALS	2,318		2,154	193,716

MARKET ADJUSTMENTS

TYPE	MDL	EFF. AREA	TOT ADJ PTS	EFF. BASE RATE	REPL. COST NEW	AYB	EYB	ECON	FNCT		NORM	% COND
0320	01	2,154	109.7600	104.27	224,598	1994	1994	0	0	0	13.75	86.25

1 TOWNHOUSE - 100% - 2016 Heated Area: 1970 HX Base Yr 2016

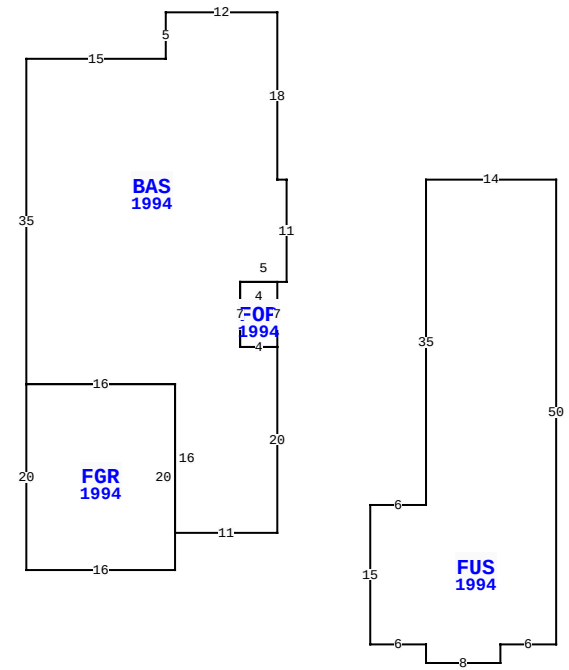

95184 VILLAGE DR, FERNANDINA BEACH

BLD DATE		LGL DATE	
XF DATE		LAND DATE	
INC DATE		AG DATE	

NASSAU COUNTY PROPERTY

PAGE 1 of 1 7

VALUATION SUMMARY

VALUATION BY		STANDARD
Tax Group: 7	Tax Dist:	
BUILDING MARKET VALUE		193,716
TOTAL MARKET OB/XF VALUE		3,847
TOTAL LAND VALUE - MARKET		130,000
TOTAL MARKET VALUE		327,563
SOH/AGL Deduction		105,064
ASSESSED VALUE		222,499
TOTAL EXEMPTION VALUE	HX HB	50,000
BASE TAXABLE VALUE		172,499
TOTAL JUST VALUE		327,563
NCON VALUE		0
INCOME VALUE		
PREVIOUS YEAR MKT VALUE		313,875

PERMIT NUM	DESCRIPTION	AMT	ISSUED
94 01375	ADDITION	1,450	10/01/1994
94-01140	NEW CONSTR	79,582	03/20/1994

SALES DATA

OFF RECORD Number	DATE	TYPE INST	Q U	V I	RSN CD	SALE PRICE
1953/0692	12/18/2014	WD	Q	I	01	185,000
GRANTOR: JUSTICE FAYE E REVOCA						
GRANTEE: SAPP JUDY H						
0828/1144	4/02/1998	WD	U	I	06	100
GRANTOR: JUSTICE FAYE E						
GRANTEE: JUSTICE FAYE E TRUS						

BUILDING NOTES

BUILDING DIMENSIONS

BAS=[YR=1994] W1 N18 W12 S5 W15 S35 FGR=[YR=1994] S20 E16 N20 W16 $ E16 S16 E11 N20 FOP=[YR=1994] N7 W4 S7 E4 $ W4 N7 E5 N11 $ PTR= E15 FUS=[YR=1994] E14 S50 W6 S2 W8 N2 W6 N15 E6 N35 $ W15 $.

EXTRA FEATURES

LN	OB/XF CODE	DESCRIPTION	BLD	CAP	L	W	UNITS	UT	Adj R	ADJ UNIT PRICE	ORIG COND	YEAR ON	YEAR ACTUAL	Q	% COND	OB/XF MKT VALUE	NOTES
1	0811	CONCRETE B	0	100	0	0	855.00	SF	5.20	5.20	100	1994	1994	3	70	3,112	
2	0911	SCRN RM A	0	100	14	15	210.00	SF	17.50	17.50	100	1994	1994	3	20	735	

LAND DESCRIPTION

TOTAL OB/XF 3,847

LN	USE CODE	CLS	LAND USE DESCRIPTION	CAP	RD	LOC ZONE	FRONT	DEPTH	TOT LND UTS	UNIT TYPE	DT	DPTH FACT	% COND	TOT ADJ	UNIT PRICE	ADJ UNIT PRICE	LAND VALUE	OTHER ADJUSTMENTS AND NOTES	YEAR	DENSITY	DECL	FRZ	YR	CONSRV
1	000133	C	SFR LAKE	100		RS-1	0.00	0.00	1.00	LT		1.00	1.00	1.00	130,000.00	130,000.00	130,000							

REVIEW DATE 10/17/2018 BY DJX Total Acres: 0.00 Total Land Value: 130,000 Market: 0 Agricultural: 0 Common: 130,000 PRINTED 08/02/2023 BY SYS