LOT 105
MARSH LAKES PB 5/159-167

CROUSER PAMELA R/NUCKOLS TODD
96057 MARSH LAKES DR
FERNANDINA BEACH, FL 32034

2023

37-2N-28-1320-0105-0000

NASSAU COUNTY PROPERTY

BUILDING CHARACTERISTICS

ELEMENT	CD	CONSTRUCTION
Exterior Wall	16	WD FR STUC 100
Roof Structur	08	IRREGULAR 100
Roof Cover	03	COMP SHNGL 100
Interior Wall	05	DRYWALL 100
Interior Floo	12	HARDWOOD 50
Interior Floo	14	CARPET 50
Air Condition	03	CENTRAL 100
Heating Type	04	AIR DUCTED 100
Bedrooms		3 100
Bathrooms		3 100
Frame	02	WOOD FRAME 100
Stories	1.	1. 100
Units		0 100
BUD8 Adjustme	04	DIST 01 100
Occupancy	00	NONE 100
Quality	03	Quality Level 03
DOR CODE	0100	SINGLE FAMILY
MAP NUM		MKT AREA 04
NEIGHBORHOOD/LOC	4015.00	

AREA TYPE	TOTAL GROSS AREA	PCT OF BASE	TOT ADJ AREA	SUBAREA MARKET VALUE
BAS	1,952	100	1,952	269,187
BAS	550	100	550	75,847
BAS	437	100	437	60,264
FGR	396	55	218	30,063
FOP	100	30	30	4,137
FSP	180	40	72	9,929
TOTALS	3,615		3,259	449,426

MARKET ADJUSTMENTS

TYPE	MDL	EFF. AREA	TOT ADJ PTS	EFF. BASE RATE	REPL. COST NEW	AYB	EYB	ECON	FNCT		NORM	% COND
0500	01	3,259	103.5000	147.49	480,670	1988	2009	0	0	0	6.50	93.50

1 SFR CUST – 100% - 2006 Heated Area: 2939 HX Base Yr 2006

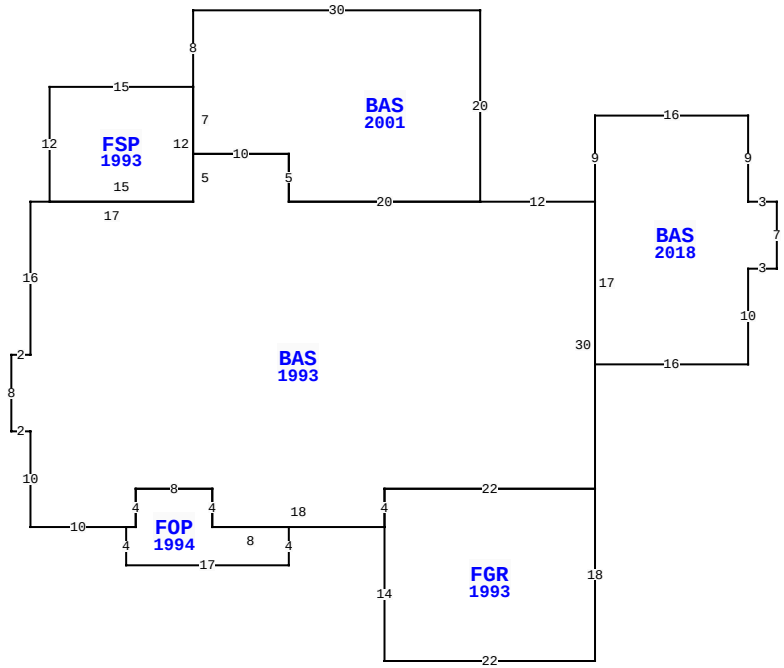

BLD DATE		LGL DATE	
XF DATE		LAND DATE	05/22/2023 MLU
INC DATE		AG DATE	

96057 MARSH LAKES DR, FERNANDINA BEACH

VALUATION SUMMARY

VALUATION BY		STANDARD
Tax Group: 7	Tax Dist:	
BUILDING MARKET VALUE		449,426
TOTAL MARKET OB/XF VALUE		15,346
TOTAL LAND VALUE - MARKET		200,000
TOTAL MARKET VALUE		664,772
SOH/AGL Deduction		337,837
ASSESSED VALUE		326,935
TOTAL EXEMPTION VALUE	HX HB	50,000
BASE TAXABLE VALUE		276,935
TOTAL JUST VALUE		664,772
NCON VALUE		0
INCOME VALUE		
PREVIOUS YEAR MKT VALUE		578,237

PERMIT NUM	DESCRIPTION	AMT	ISSUED
M1704293	H/AC	0	07/01/2017
006989	REMODEL	3,089	03/01/2000
94-0110	ADDITION	10,000	07/01/1994
3170	NEW CONSTR	0	08/16/1988
5092	NEW CONSTR	133,600	08/09/1988
5206	NEW CONSTR	2,500	07/08/1988

SALES DATA

OFF RECORD Number	DATE	TYPE INST	Q / U	V / I	RSN CD	SALE PRICE
2250/1283	1/18/2019	QC	U	I	11	200,000
GRANTOR: CROUSER PAMELA R						
GRANTEE: CROUSER PAMELA R &						
2250/1281	1/16/2019	QC	U	I	11	100
GRANTOR: CROUSER THOMAS P						
GRANTEE: CROUSER PAMELA R						

BUILDING NOTES

BUILDING DIMENSIONS

BAS=[YR=2018] W3 N9 W16 S9 BAS=[YR=1993] W12 BAS=[YR=2001] N20 W30 S8 FSP=[YR=1993] W15 S12 E15 N12$ S7 E10 S5 E20$ W20 N5 W10 S5 W17 S16W2 S8 E2 S10 E10 FOP=[YR=1994] S4 E17 N4 W8 N4 W8 S4 W1$ E1 N4 E8 S4E18 FGR=[YR=1993] S14 E22 N18 W22 S4$ N4 E22 N30$ S17 E16 N10 E3 N7$.

EXTRA FEATURES

LN	OB/XF CODE	DESCRIPTION	BLD	CAP	L	W	UNITS	UT	Adj R	ADJ UNIT PRICE	ORIG COND	YEAR ON	YEAR ACTUAL	Q	% COND	OB/XF MKT VALUE	NOTES
1	0812	CONCRETE C	0	100	0	0	2,169.00	SF	4.00	4.00	100	1988	1988	3	57	4,945	
2	0504	FP-ELECTRI	0	100	0	0	1.00	UT	2,000.00	2,000.00	100	1988	1988	3	66	1,320	
3	0855	CONC PAVER	0	100	0	0	336.00	SF	7.00	7.00	100	2012	2012	3	94	2,211	
4	0855	CONC PAVER	0	100	0	0	1,044.00	SF	7.00	7.00	100	2012	2012	3	94	6,870	

LAND DESCRIPTION

TOTAL OB/XF 15,346

LN	USE CODE	CLS	LAND USE DESCRIPTION	CAP	RD	LOC ZONE	FRONT	DEPTH	TOT LND UTS	UNIT TYPE	DT	DPTH FACT	% COND	TOT ADJ	UNIT PRICE	ADJ UNIT PRICE	LAND VALUE	OTHER ADJUSTMENTS AND NOTES	YEAR	DENSITY	DECL	FRZ	YR	CONSRV
1	000133	C	SFR LAKE	100		RS-1	0.00	0.00	1.00	LT		1.00	1.00	1.00	200,000.00	200,000.00	200,000							

REVIEW DATE 10/16/2018 BY DJ Total Acres: 0.00 Total Land Value: 200,000 Market: 0 Agricultural: 0 Common: 200,000 PRINTED 08/02/2023 BY SYS