LOT 101
IN OR 2201/1847
MARSH LAKES PB 5/159-167

SHAVE MEREDITH L & JONATHAN T
96079 MARSH LAKES DRIVE
FERNANDINA BEACH, FL 32034

2023

37-2N-28-1320-0101-0000

BUILDING CHARACTERISTICS

ELEMENT	CD	CONSTRUCTION
Exterior Wall	20	FACE BRICK 100
Roof Structur	03	GABLE/HIP 100
Roof Cover	03	COMP SHNGL 100
Interior Wall	05	DRYWALL 100
Interior Floo	12	HARDWOOD 60
Interior Floo	11	CLAY TILE 40
Air Condition	03	CENTRAL 100
Heating Type	04	AIR DUCTED 100
Bedrooms		3 100
Bathrooms		2.5 100
Frame	02	WOOD FRAME 100
Stories	1.5	1.5 100
Units		0 100
Occupancy	00	NONE 100
Quality	01	Quality Level 01
DOR CODE	0100	SINGLE FAMILY
MAP NUM		MKT AREA 04
NEIGHBORHOOD/LOC	4015.00	

AREA TYPE	TOTAL GROSS AREA	PCT OF BASE	TOT ADJ AREA	SUBAREA MARKET VALUE
BAS	2,564	100	2,564	242,504
DCK	384	10	38	3,594
FGR	649	55	357	33,765
FOP	56	30	17	1,608
FSP	204	40	82	7,755
FUS	260	100	260	24,591
TOTALS	4,117		3,318	313,818

MARKET ADJUSTMENTS

TYPE	MDL	EFF. AREA	TOT ADJ PTS	EFF. BASE RATE	REPL. COST NEW	AYB	EYB	ECON	FNCT		NORM	% COND
0900	01	3,318	95.3856	113.27	375,830	1989	2000	0	0	0	16.50	83.50

1 SNGL FAM – 100% - 2019 Heated Area: 2824 HX Base Yr 2019

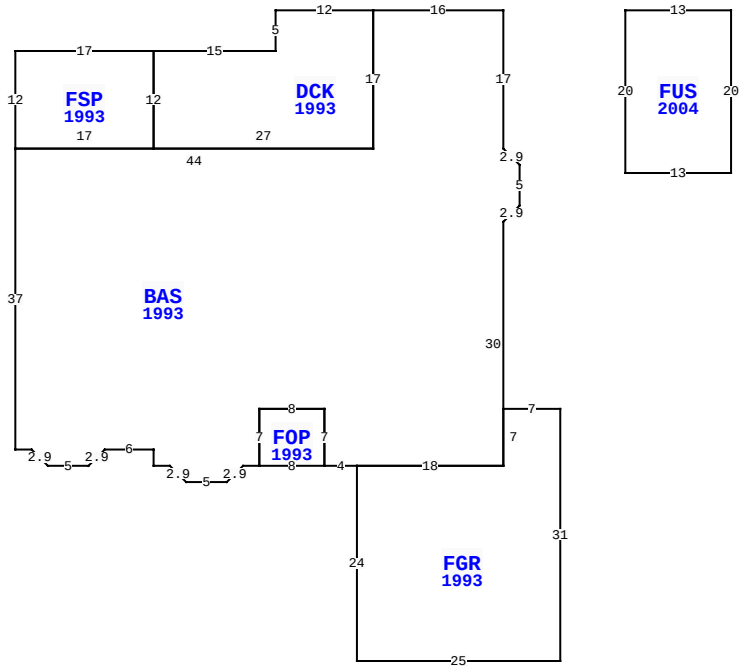

96079 MARSH LAKES DR, FERNANDINA BEACH

BLD DATE		LGL DATE	
XF DATE		LAND DATE	05/22/2023 MLU
INC DATE		AG DATE	

NASSAU COUNTY PROPERTY

PAGE 1 of 1 7

VALUATION SUMMARY

VALUATION BY		STANDARD
Tax Group: 7	Tax Dist:	
BUILDING MARKET VALUE		313,818
TOTAL MARKET OB/XF VALUE		13,146
TOTAL LAND VALUE - MARKET		200,000
TOTAL MARKET VALUE		526,964
SOH/AGL Deduction		142,411
ASSESSED VALUE		384,553
TOTAL EXEMPTION VALUE	HX HB	50,000
BASE TAXABLE VALUE		334,553
TOTAL JUST VALUE		526,964
NCON VALUE		0
INCOME VALUE		
PREVIOUS YEAR MKT VALUE		533,505

PERMIT NUM	DESCRIPTION	AMT	ISSUED
R1313317	ROOF	13,825	01/01/2013
3353	NEW CONSTR	0	01/10/1989
2833	H/AC	4,000	12/06/1988
5552	NEW CONSTR	3,200	12/06/1988
5340	NEW CONSTR	108,600	12/01/1988

SALES DATA

OFF RECORD Number	DATE	TYPE INST	Q U	V I	RSN CD	SALE PRICE
2201/1847	6/01/2018	WD	Q	I	01	445,000
GRANTOR: DOLINSKI STEVEN M						
GRANTEE: SHAVE MEREDITH L &						
2021/0924	12/29/2015	WD	Q	I	01	360,000
GRANTOR: MCGRATH EILEEN M						
GRANTEE: DOLINSKI STEVEN M						

BUILDING NOTES

BUILDING DIMENSIONS

BAS=[YR=1993] W16 DCK=[YR=1993] W12 S5 W15 FSP=[YR=1993] W17 S12 E17 N12$ S12 E27 N17$ S17 W44 S37 E2 R2 D2 E5 R2 U2 E6 S2 E2 R2 D2 E5 R2 U2 E2 FOP=[YR=1993] E8 N7 W8 S7$ N7 E8 S7 E4 FGR=[YR=1993] S24 E25 N31 W7 S7 W18$ E18 N30 R2 U2 N5 L2 U2 N17 $ PTR= E15 FUS=[YR=2004] E13 S20 W13 N20$ W15$.

EXTRA FEATURES

LN	OB/XF CODE	DESCRIPTION	BLD	CAP	L	W	UNITS	UT	Adj R	ADJ UNIT PRICE	ORIG COND	YEAR ON	YEAR ACTUAL	Q	% COND	OB/XF MKT VALUE	NOTES
1	0504	FP-ELECTRI	0	100	0	0	1.00	UT	2,000.00	2,000.00	100	1989	1989	3	68	1,360	
2	0810	CONCRETE A	0	100	0	0	1,108.00	SF	6.50	6.50	100	1989	1989	3	59.5	4,285	
3	0300	BOAT DCK W	0	100	0	0	140.00	SF	40.00	40.00	100	2000	2000	3	29	1,624	
4	0462	ST/AL FNC	0	100	180	0	720.00	SF	10.00	10.00	100	2012	2012	3	71	5,112	
5	0463	FENCE GATE	0	100	0	0	3.00	UT	300.00	300.00	100	2012	2012	3	85	765	

LAND DESCRIPTION

TOTAL OB/XF 13,146

LN	USE CODE	CLS	LAND USE DESCRIPTION	CAP	RD	LOC ZONE	FRONT	DEPTH	TOT LND UTS	UNIT TYPE	DT	DPTH FACT	% COND	TOT ADJ	UNIT PRICE	ADJ UNIT PRICE	LAND VALUE	OTHER ADJUSTMENTS AND NOTES	YEAR	DENSITY	DECL	FRZ	YR	CONSRV
1	000133	C	SFR LAKE	100		RS-1	0.00	0.00	1.00	LT		1.00	1.00	1.00	200,000.00	200,000.00	200,000							

REVIEW DATE 01/18/2023 BY DJA Total Acres: 0.00 Total Land Value: 200,000 Market: 0 Agricultural: 0 Common: 200,000 PRINTED 08/02/2023 BY SYS