LOT 48
MARSH LAKES PB 5/159-167

BILLINGS MARIE S LIVING TRUST/BILLINGS MARIE S TRU
96216 MARSH LAKES DR
FERNANDINA BEACH, FL 32034

2023

37-2N-28-1320-0048-0000

BUILDING CHARACTERISTICS

ELEMENT	CD	CONSTRUCTION
Exterior Wall	17	CB STUCCO 100
Roof Structur	08	IRREGULAR 100
Roof Cover	03	COMP SHNGL 100
Interior Wall	05	DRYWALL 100
Interior Floo	14	CARPET 90
Interior Floo	11	CLAY TILE 10
Air Condition	03	CENTRAL 100
Heating Type	04	AIR DUCTED 100
Bedrooms		3 100
Bathrooms		2 100
Frame	02	WOOD FRAME 100
Stories	1.	1. 100
Units		0 100
Occupancy	00	NONE 100
Quality	01	Quality Level 01
DOR CODE	0100	SINGLE FAMILY
MAP NUM		MKT AREA 04
NEIGHBORHOOD/LOC	4015.00	

AREA TYPE	TOTAL GROSS AREA	PCT OF BASE	TOT ADJ AREA	SUBAREA MARKET VALUE
BAS	2,508	100	2,508	245,583
FGR	546	55	300	29,376
FOP	36	30	11	1,077
FOP	377	30	113	11,065
PTO	50	5	2	196
STR	63	10	6	588
TOTALS	3,580		2,940	287,885

MARKET ADJUSTMENTS

TYPE	MDL	EFF. AREA	TOT ADJ PTS	EFF. BASE RATE	REPL. COST NEW	AYB	EYB	ECON	FNCT		NORM	% COND
0900	01	2,940	91.6218	108.80	319,872	1998	2002	0	0	0	10.00	90.00

1 SNGL FAM – 100% - 2011 Heated Area: 2508 HX Base Yr 2011

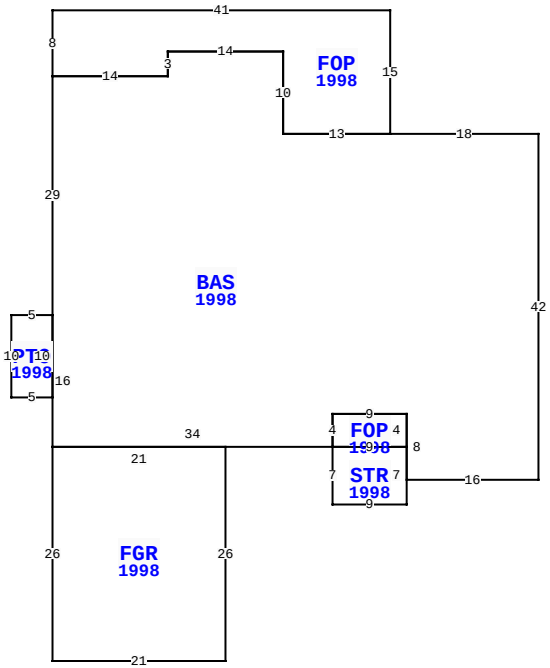

96216 MARSH LAKES DR, FERNANDINA BEACH

BLD DATE	03/04/2008	RK	LGL DATE	05/22/2023	MLU
XF DATE			LAND DATE		
INC DATE			AG DATE		

NASSAU COUNTY PROPERTY

PAGE 1 of 1 7

VALUATION SUMMARY

VALUATION BY		STANDARD
Tax Group: 7	Tax Dist:	
BUILDING MARKET VALUE		287,885
TOTAL MARKET OB/XF VALUE		42,082
TOTAL LAND VALUE - MARKET		300,000
TOTAL MARKET VALUE		629,967
SOH/AGL Deduction		170,456
ASSESSED VALUE		459,511
TOTAL EXEMPTION VALUE	HX HB	50,000
BASE TAXABLE VALUE		409,511
TOTAL JUST VALUE		629,967
NCON VALUE		0
INCOME VALUE		
PREVIOUS YEAR MKT VALUE		589,997

PERMIT NUM	DESCRIPTION	AMT	ISSUED
R2002731	REPAIR/RRF	20,021	04/01/2020
B9704133	NEW CONSTR	1,000,000	07/01/1997

SALES DATA

OFF RECORD Number	DATE	TYPE INST	Q U	V I	RSN CD	SALE PRICE
2584/1278	8/11/2022	WD	U	I	11	100
GRANTOR: BILLINGS RICHARD R &						
GRANTEE: BILLINGS MARIE S LI						
2584/1275	8/11/2022	WD	U	I	11	100
GRANTOR: BILLINGS RICHARD R &						
GRANTEE: BILLINGS RICHARD R						

BUILDING NOTES

BUILDING DIMENSIONS

BAS=[YR=1998] W18 FOP=[YR=1998] N15 W41 S8 E14 N3 E14 S10 E13 $ W13 N10 W14 S3 W14 S29 PTO=[YR=1998] W5 S10 E5 N10 $ S16 FGR=[YR=1998] S26 E21 N26 W21 $ E34 STR=[YR=1998] S7 E9 N7 FOP=[YR=1998] N4 W9 S4 E9 $ W9 $ N4 E9 S8 E16 N42$.

EXTRA FEATURES

LN	OB/XF CODE	DESCRIPTION	BLD	CAP	L	W	UNITS	UT	Adj R	ADJ UNIT PRICE	ORIG COND	YEAR ON	YEAR ACTUAL	Q	% COND	OB/XF MKT VALUE	NOTES
1	0500	FP-PRE FAB	0	100	0	0	1.00	UT	3,500.00	3,500.00	100	1998	1998	3	83	2,905	
2	0810	CONCRETE A	0	100	0	0	2,395.00	SF	6.50	6.50	100	1998	1998	3	77	11,987	
3	0300	BOAT DCK W	0	100	0	0	1,144.00	SF	40.00	40.00	100	2007	2007	3	52	23,795	
4	0855	CONC PAVER	0	100	0	0	350.00	SF	10.00	10.00	100	2017	2017	3	97	3,395	

LAND DESCRIPTION

TOTAL OB/XF 42,082

LN	USE CODE	CLS	LAND USE DESCRIPTION	CAP	RD	LOC ZONE	FRONT	DEPTH	TOT LND UTS	UNIT TYPE	DT	DPTH FACT	% COND	TOT ADJ	UNIT PRICE	ADJ UNIT PRICE	LAND VALUE	OTHER ADJUSTMENTS AND NOTES	YEAR	DENSITY	DECL	FRZ	YR	CONSRV
1	000116	C	SFR MARSH	100		RS-1	0.00	0.00	1.00	LT		1.00	1.00	1.00	300,000.00	300,000.00	300,000							

REVIEW DATE 12/17/2019 BY TWA Total Acres: 0.00 Total Land Value: 300,000 Market: 0 Agricultural: 0 Common: 300,000 PRINTED 08/02/2023 BY SYS