LOT 40
IN OR 2242/1412
MARSH LAKES PB 5/159-167

SCHLUETER JEFFREY J/RAY KIMBERLY J
96188 MARSH LAKES DR
FERNANDINA BEACH, FL 32034

2023

37-2N-28-1320-0040-0000

BUILDING CHARACTERISTICS

ELEMENT	CD	CONSTRUCTION
Exterior Wall	17	CB STUCCO 100
Roof Structur	08	IRREGULAR 100
Roof Cover	08	CLAY TILE 100
Interior Wall	05	DRYWALL 50
Interior Wall	08	DECORATIVE 50
Interior Floo	11	CLAY TILE 80
Interior Floo	14	CARPET 20
Air Condition	03	CENTRAL 100
Heating Type	04	AIR DUCTED 100
Bedrooms		5 100
Bathrooms		6.5 100
Frame	04	REIN CONC 100
Stories	2.	2. 100
Units		0 100
Quality	03	Quality Level 03
DOR CODE	0100	SINGLE FAMILY
MAP NUM		MKT AREA 04
NEIGHBORHOOD/LOC	4015.00	

AREA TYPE	TOTAL GROSS AREA	PCT OF BASE	TOT ADJ AREA	SUBAREA MARKET VALUE
BAS	4,727	100	4,727	955,391
FGR	942	55	518	104,695
FGR	476	55	262	52,953
FOP	12	30	4	808
FOP	20	30	6	1,213
FOP	48	30	14	2,830
FOP	56	30	17	3,436
FOP	80	30	24	4,851
FOP	156	30	47	9,500
FOP	428	30	128	25,870
TOTALS	8,230		6,770	1,368,309

MARKET ADJUSTMENTS

TYPE	MDL	EFF. AREA	TOT ADJ PTS	EFF. BASE RATE	REPL. COST NEW	AYB	EYB	ECON	FNCT		NORM	% COND
0500	11	6,770	156.7244	223.33	1,511,944	2003	2003	0	0	0	9.50	90.50

1 SFR CUST - 100% - 2019 Heated Area: 5675 HX Base Yr 2019

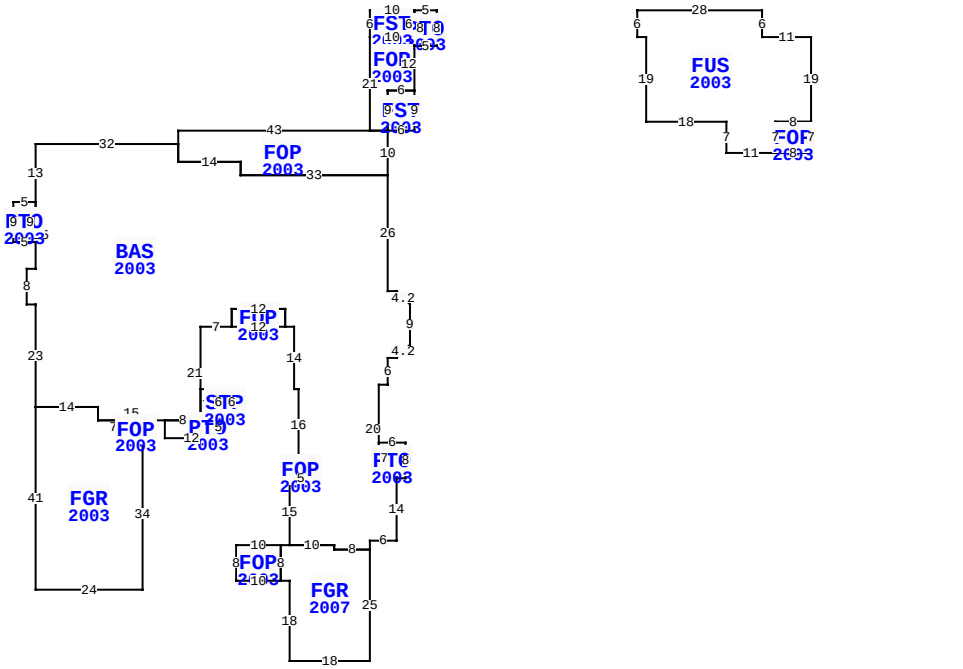

** This building has 18 Sub-Areas

96188 MARSH LAKES DR, FERNANDINA BEACH

BLD DATE		LGL DATE	
XF DATE		LAND DATE	05/22/2023 MLU
INC DATE		AG DATE	

NASSAU COUNTY PROPERTY

PAGE 1 of 2 7

VALUATION SUMMARY

VALUATION BY		STANDARD
Tax Group: 7	Tax Dist:	
BUILDING MARKET VALUE		1,368,309
TOTAL MARKET OB/XF VALUE		160,650
TOTAL LAND VALUE - MARKET		300,000
TOTAL MARKET VALUE		1,828,959
SOH/AGL Deduction		466,369
ASSESSED VALUE		1,362,590
TOTAL EXEMPTION VALUE	HX HB	50,000
BASE TAXABLE VALUE		1,312,590
TOTAL JUST VALUE		1,828,959
NCON VALUE		9,728
INCOME VALUE		
PREVIOUS YEAR MKT VALUE		1,495,355

PERMIT NUM	DESCRIPTION	AMT	ISSUED
M1703599	H/AC	0	06/01/2017
P1216152	OTHER	0	10/01/2012
E16689	ELEC OTHER	750	02/01/2006
P10116	OTHER	0	10/01/2005
B0516045	GARAGE	22,750	09/01/2005
R08211	REPAIR/RRF	1,000	09/01/2005

SALES DATA

OFF RECORD Number	DATE	TYPE INST	Q U	V I	RSN CD	SALE PRICE
2242/1412	12/07/2018	WD	Q	I	02	1,395,000
GRANTOR: OESTMANN ROSS E & JOA						
GRANTEE: SCHLUETER JEFFREY J						
1775/0164	1/17/2012	WD	Q	I	02	1,340,000
GRANTOR: ANDERSON RONALD R						
GRANTEE: OESTMANN ROSS E & J						

BUILDING NOTES

EXTRA FEATURES

LN	OB/XF CODE	DESCRIPTION	BLD	CAP	L	W	UNITS	UT	Adj R	ADJ UNIT PRICE	ORIG COND	YEAR ON	YEAR ACTUAL	Q	% COND	OB/XF MKT VALUE	NOTES
1	0855	CONC PAVER	0	100	0	0	3,917.00	SF	10.00	10.00	100	2003	2003	3	84	32,903	
2	0500	FP-PRE FAB	0	100	0	0	2.00	UT	3,500.00	3,500.00	100	2003	2003	3	88	6,160	
3	0861	POOL GUNIT	0	100	0	0	420.00	SF	85.00	85.00	100	2003	2003	3	36	12,852	
4	0911	SCRN RM A	0	100	0	0	984.00	SF	17.50	17.50	100	2003	2003	3	22	3,788	
5	0855	CONC PAVER	0	100	0	0	564.00	SF	10.00	10.00	100	2003	2003	3	84	4,738	
6	0877	JACUZZI	0	100	0	0	1.00	UT	3,000.00	3,000.00	100	2003	2003	3	22	660	
8	0300	BOAT DCK W	0	100	0	0	5,888.00	SF	40.00	40.00	100	2003	2003	3	36	84,787	
11	1126	CB/STC 8"	0	100	0	0	105.00	SF	8.00	8.00	100	2003	2003	3	84	706	
12	1242	WD DECK A	0	100	0	0	380.00	SF	10.00	10.00	100	2005	2005	3	27	1,026	
13	0600	SUMMER KIT	0	100	0	0	1.00	UT	15,000.00	15,000.00	100	2003	2003	3	22	3,300	

BUILDING DIMENSIONS

PTO=[YR=2003] W5 FST=[YR=2003] W10 S6 FOP=[YR=2003] S21
FOP=[YR=2003] W43 S3 BAS=[YR=2003] W32 S13 PTO=[YR=2003]
W5 S9 E5 N9 $ S15 W2 S8 E2 S23 FGR=[YR=2003] S41 E24 N34
FOP=[YR=2003] N4 W3 S4 E3$ W3 N4 W7 N3 W14$ E14 S3 E15
PTO=[YR=2003] S4 E12 N5 STP=[YR=2003] E3 N6 W3 S6$ N6 W4 S7
W8$ E8 N21 E7 FOP=[YR=2003] E12 N4 W12 S4$ N4 E12 S4 E2 S14
E1 S16 FOP=[YR=2003] W2 S4 E5 N4 W3$ E3 S4 W5 S15
FGR=[YR=2007] W2 FOP=[YR=2003] W10 S8 E10 N8$ S8 E2 S18 E18
N25 W8 N1 W10$ E10 S1 E8 N2 E6 N14 PTO=[YR=2003] E2 N8 W6 S7
E4 S1$ N1 W4 N20 E2 N6 E2 R3 U3 N9 U3 L3 W2 N26 W33 N3
W14 N4$ S4 E14 S3 E33 N10 W4$ E4 FST=[YR=2003] E6 N9 W6 S9$
N9 E6 N12 W10$ E10 N6$ S8 E5 N8$ PTR= E45 FUS=[YR=2003] E28

LAND DESCRIPTION

TOTAL OB/XF 150,920

LN	USE CODE	CLS	LAND USE DESCRIPTION	CAP	RD	LOC ZONE	FRONT	DEPTH	TOT LND UTS	UNIT TYPE	DT	DPTH FACT	% COND	TOT ADJ	UNIT PRICE	ADJ UNIT PRICE	LAND VALUE	OTHER ADJUSTMENTS AND NOTES	YEAR	DENSITY	DECL	FRZ	YR	CONSRV
1	000116	C	SFR MARSH	100		RS-1	0.00	0.00	1.00	LT		1.00	1.00	1.00	300,000.00	300,000.00	300,000							

REVIEW DATE 10/24/2017 BY KWX Total Acres: 0.00 Total Land Value: 300,000 Market: 0 Agricultural: 0 Common: 300,000 PRINTED 08/02/2023 BY SYS

LOT 40
IN OR 2242/1412
MARSH LAKES PB 5/159-167

SCHLUETER JEFFREY J/RAY KIMBERLY J
96188 MARSH LAKES DR
FERNANDINA BEACH, FL 32034

2023

37-2N-28-1320-0040-0000

BUILDING CHARACTERISTICS

ELEMENT	CD	CONSTRUCTION

DOR CODE	0100	SINGLE FAMILY	
MAP NUM		MKT AREA	04
NEIGHBORHOOD/LOC	4015.00		

AREA TYPE	TOTAL GROSS AREA	PCT OF BASE	TOT ADJ AREA	SUBAREA MARKET VALUE
TOTALS				

MARKET ADJUSTMENTS

TYPE	MDL	EFF. AREA	TOT ADJ PTS	EFF. BASE RATE	REPL. COST NEW	AYB	EYB	ECON	FNCT		NORM	% COND

BLD DATE		LGL DATE	
XF DATE		LAND DATE	05/22/2023 MLU
INC DATE		AG DATE	

NASSAU COUNTY PROPERTY

PAGE 2 of 2 7

VALUATION SUMMARY

VALUATION BY		STANDARD
Tax Group: 7	Tax Dist:	
BUILDING MARKET VALUE		1,368,309
TOTAL MARKET OB/XF VALUE		160,650
TOTAL LAND VALUE - MARKET		300,000
TOTAL MARKET VALUE		1,828,959
SOH/AGL Deduction		466,369
ASSESSED VALUE		1,362,590
TOTAL EXEMPTION VALUE	HX HB	50,000
BASE TAXABLE VALUE		1,312,590
TOTAL JUST VALUE		1,828,959
NCON VALUE		9,728
INCOME VALUE		
PREVIOUS YEAR MKT VALUE		1,495,355

PERMIT NUM	DESCRIPTION	AMT	ISSUED
B0209185	NEW CONSTR	500,000	01/01/2002

SALES DATA

OFF RECORD Number	DATE	TYPE INST	Q / U	V / I	RSN CD	SALE PRICE
2242/1412	12/07/2018	WD	Q	I	02	1,395,000
GRANTOR: OESTMANN ROSS E & JOA						
GRANTEE: SCHLUETER JEFFREY J						
1775/0164	1/17/2012	WD	Q	I	02	1,340,000
GRANTOR: ANDERSON RONALD R						
GRANTEE: OESTMANN ROSS E & J						

BUILDING NOTES

BUILDING DIMENSIONS

EXTRA FEATURES

LN	OB/XF CODE	DESCRIPTION	BLD	CAP	L	W	UNITS	UT	Adj R	ADJ UNIT PRICE	ORIG COND	YEAR ON	YEAR ACTUAL	Q	% COND	OB/XF MKT VALUE	NOTES
14	0310	AL GANG WY	1	100	0	0	22.00	LF	115.00	115.00	100	2023	2022		100	2,530	
15	0303	FLT DOCK W	1	100	20	10	200.00	SF	26.00	26.00	100	2023	2022		100	5,200	
16	0317	DCK PLNG W	1	100	0	0	2.00	UT	1,000.00	1,000.00	100	2023	2022		100	2,000	

LAND DESCRIPTION

TOTAL OB/XF 9,730

LN	USE CODE	CLS	LAND USE DESCRIPTION	CAP	RD	LOC ZONE	FRONT	DEPTH	TOT LND UTS	UNIT TYPE	DT	DPTH FACT	% COND	TOT ADJ	UNIT PRICE	ADJ UNIT PRICE	LAND VALUE	OTHER ADJUSTMENTS AND NOTES	YEAR	DENSITY	DECL	FRZ	YR	CONSRV

REVIEW DATE 10/24/2017 BY KWX Total Acres: 0.00 Total Land Value: 300,000 Market: 0 Agricultural: 0 Common: 300,000 PRINTED 08/02/2023 BY SYS