LOTS 22 & 23(EX S-1 OF LOT 23)
IN OR 2549/92
MARSH LAKES PB 5/159-167

GILCHRIST ANTHONY G/GILCHRIST ANNE D
88006 MARSH LAKES CT
FERNANDINA BEACH, FL 32034

2023

37-2N-28-1320-0022-0000

NASSAU COUNTY PROPERTY

BUILDING CHARACTERISTICS

ELEMENT	CD	CONSTRUCTION
Exterior Wall	16	WD FR STUC 100
Roof Structur	08	IRREGULAR 100
Roof Cover	03	COMP SHNGL 100
Interior Wall	05	DRYWALL 100
Interior Floo	11	CLAY TILE 50
Interior Floo	14	CARPET 50
Air Condition	03	CENTRAL 100
Heating Type	04	AIR DUCTED 100
Bedrooms		3 100
Bathrooms		2.5 100
Frame	02	WOOD FRAME 100
Stories	1.	1. 100
Units		0 100
Occupancy	00	NONE 100
Quality	06	Quality Level 06
DOR CODE	0100	SINGLE FAMILY
MAP NUM		MKT AREA 04
NEIGHBORHOOD/LOC	4015.00	

AREA TYPE	TOTAL GROSS AREA	PCT OF BASE	TOT ADJ AREA	SUBAREA MARKET VALUE
BAS	2,576	100	2,576	539,758
BAS	328	100	328	68,727
FGR	506	55	278	58,251
FOP	112	30	34	7,124
UOP	282	20	56	11,733
TOTALS	3,804		3,272	685,594

MARKET ADJUSTMENTS

TYPE	MDL	EFF. AREA	TOT ADJ PTS	EFF. BASE RATE	REPL. COST NEW	AYB	EYB	ECON	FNCT		NORM	% COND
0500	11	3,272	148.5294	211.65	692,519	1989	2020	0	0	0	1.00	99.00

1 SFR CUST – 100% - 2023 Heated Area: 2904 HX Base Yr 2023

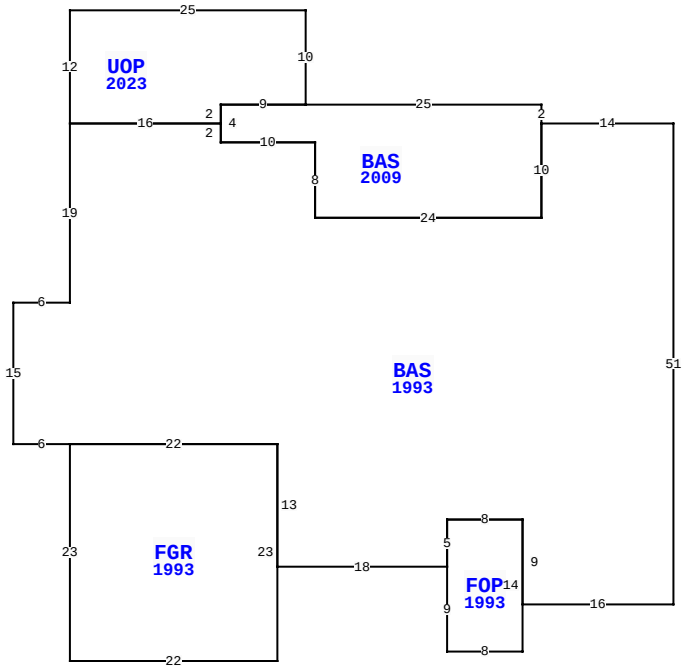

88006 MARSH LAKES CT, FERNANDINA BEACH

BLD DATE		LGL DATE	
XF DATE		LAND DATE	05/22/2023 MLU
INC DATE		AG DATE	

VALUATION SUMMARY

VALUATION BY		STANDARD
Tax Group: 7	Tax Dist:	
BUILDING MARKET VALUE		750,424
TOTAL MARKET OB/XF VALUE		58,062
TOTAL LAND VALUE - MARKET		450,000
TOTAL MARKET VALUE		1,258,486
SOH/AGL Deduction		0
ASSESSED VALUE		1,258,486
TOTAL EXEMPTION VALUE	HX HB	50,000
BASE TAXABLE VALUE		1,208,486
TOTAL JUST VALUE		1,258,486
NCON VALUE		0
INCOME VALUE		
PREVIOUS YEAR MKT VALUE		807,120

PERMIT NUM	DESCRIPTION	AMT	ISSUED
M1905575	H/AC	4,800	05/28/2019
R1706381	REPAIR/RRF	3,500	10/01/2017
M1521355	H/AC	0	06/23/2015
R1112563	REPAIR/RRF	18,000	02/23/2011
962954	NEW CONSTR	40,005	07/17/1996
5641	NEW CONSTR	127,552	04/12/1989

SALES DATA

OFF RECORD Number	DATE	TYPE INST	Q U	V I	RSN CD	SALE PRICE
2549/0092	3/15/2022	WD	Q	I	01	1,600,000
GRANTOR: ABACO TRUST						
GRANTEE: GILCHRIST ANTHONY G						
2360/0500	5/07/2020	WD	U	I	11	100
GRANTOR: TENNILLE TERRI G						
GRANTEE: ABACO TRUST						

BUILDING NOTES

BUILDING DIMENSIONS

BAS=[YR=1993;ORIG=0,0] W14 S10 W24 N8 W10 N2 W16 S19 W6 S15
E6 E22 S13 E18 N5 E8 S9 E16 N51 $
FGR=[YR=1993;ORIG=-64,34] S23 E22 N23 W22 $
BAS=[YR=2009;ORIG=-14,0] N2 W25 W9 S4 E10 S8 E24 N10 $
FOP=[YR=1993;ORIG=-24,47] S9 E8 N14 W8 S5 $
UOP=[YR=2023;ORIG=-64,0] E16 N2 E9 N10 W25 S12 $
.

EXTRA FEATURES

L N	OB/XF CODE	DESCRIPTION	BLD	CAP	L	W	UNITS	UT	Adj R	ADJ UNIT PRICE	ORIG COND	YEAR ON	YEAR ACTUAL	Q	% COND	OB/XF MKT VALUE	NOTES
1	0812	CONCRETE C	0	100	0	0	3,926.00	SF	4.00	4.00	100	1989	1989	3	59.5	9,344	
2	1242	WD DECK A	0	100	0	0	1,007.00	SF	10.00	10.00	100	1989	1989	3	20	2,014	
3	0500	FP-PRE FAB	0	100	0	0	1.00	UT	3,500.00	3,500.00	100	1989	1989	3	68	2,380	
4	0877	JACUZZI	0	100	0	0	1.00	UT	1,000.00	1,000.00	100	1989	1989	3	20	200	
5	0811	CONCRETE B	0	100	26	32	832.00	SF	5.20	5.20	100	1996	1996	3	73	3,158	
6	0820	WOOD WALK	0	100	0	0	72.00	SF	11.75	11.75	100	1999	1999	3	40	338	
7	0300	BOAT DCK W	0	100	0	0	3,344.00	SF	40.00	40.00	100	2000	2000	3	29	38,790	
8	0311	WD GANG WY	0	100	16	4	64.00	SF	45.00	45.00	100	2000	2000	3	20	576	
9	0322	BOAT LFT L	0	100	0	0	1.00	UT	1,500.00	1,500.00	100	2000	2000	3	20	300	
11	0350	CARPORT WD	0	100	20	5	100.00	SF	13.00	13.00	100	2015	2015	3	74	962	

TOTAL OB/XF 58,062

LAND DESCRIPTION

L N	USE CODE	CLS	LAND USE DESCRIPTION	CAP	R D	LOC ZONE	FRONT	DEPTH	TOT LND UTS	UNIT TYPE	D T	DPTH FACT	% COND	TOT ADJ	UNIT PRICE	ADJ UNIT PRICE	LAND VALUE	OTHER ADJUSTMENTS AND NOTES	YEAR	DENSITY	DECL	FRZ	YR	CONSRV
1	000116	C	SFR MARSH	100	0003	RS-1	0.00	0.00	1.50	LT		1.00	1.00	1.00	300,000.00	300,000.00	450,000							

REVIEW DATE 08/20/2020 BY KWA Total Acres: 0.00 Total Land Value: 450,000 Market: 0 Agricultural: 0 Common: 450,000 PRINTED 08/02/2023 BY SYS

LOTS 22 & 23(EX S-1 OF LOT 23)
IN OR 2549/92
MARSH LAKES PB 5/159-167

GILCHRIST ANTHONY G/GILCHRIST ANNE D
88006 MARSH LAKES CT
FERNANDINA BEACH, FL 32034

2023

37-2N-28-1320-0022-0000

NASSAU COUNTY PROPERTY

BUILDING CHARACTERISTICS

ELEMENT	CD	CONSTRUCTION
Exterior Wall	16	WD FR STUC 50
Exterior Wall	17	CB STUCCO 50
Roof Structur	03	GABLE/HIP 100
Roof Cover	03	COMP SHNGL 100
Interior Wall	05	DRYWALL 100
Interior Floo	14	CARPET 100
Air Condition	03	CENTRAL 100
Heating Type	04	AIR DUCTED 100
Bedrooms		1 100
Bathrooms		1 100
Frame	02	WOOD FRAME 100
Stories	2.	2. 100
Units		0 100
Occupancy	00	NONE 100
Quality	04	Quality Level 04
DOR CODE	0100	SINGLE FAMILY
MAP NUM		MKT AREA 04
NEIGHBORHOOD/LOC	4015.00	

AREA TYPE	TOTAL GROSS AREA	PCT OF BASE	TOT ADJ AREA	SUBAREA MARKET VALUE
BAS	676	100	676	39,696
FGR	660	55	363	21,317
FOP	16	30	5	293
FSP	100	40	40	2,349
UOP	100	20	20	1,175
TOTALS	1,552		1,104	64,830

MARKET ADJUSTMENTS

TYPE	MDL	EFF. AREA	TOT ADJ PTS	EFF. BASE RATE	REPL. COST NEW	AYB	EYB	ECON	FNCT		NORM	% COND
0150	01	1,104	122.9865	61.49	67,885	1996	2013	0	0	0	4.50	95.50

2 ACCESORY U – 100% - 2023 Heated Area: 676 HX Base Yr 2023

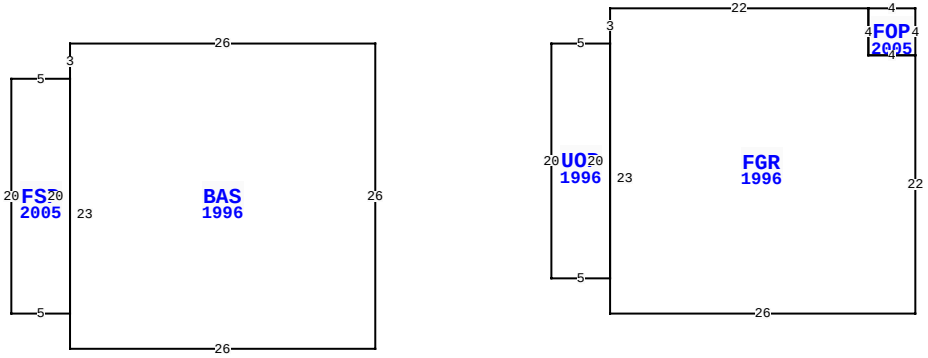

88006 MARSH LAKES CT, FERNANDINA BEACH

BLD DATE		LGL DATE	
XF DATE		LAND DATE	05/22/2023 MLU
INC DATE		AG DATE	

VALUATION SUMMARY

VALUATION BY		STANDARD
Tax Group: 7	Tax Dist:	
BUILDING MARKET VALUE		750,424
TOTAL MARKET OB/XF VALUE		58,062
TOTAL LAND VALUE - MARKET		450,000
TOTAL MARKET VALUE		1,258,486
SOH/AGL Deduction		0
ASSESSED VALUE		1,258,486
TOTAL EXEMPTION VALUE	HX HB	50,000
BASE TAXABLE VALUE		1,208,486
TOTAL JUST VALUE		1,258,486
NCON VALUE		0
INCOME VALUE		
PREVIOUS YEAR MKT VALUE		807,120

PERMIT NUM	DESCRIPTION	AMT	ISSUED

SALES DATA

OFF RECORD Number	DATE	TYPE INST	Q U /	V I /	RSN CD	SALE PRICE
2549/0092	3/15/2022	WD	Q	I	01	1,600,000
GRANTOR: ABACO TRUST						
GRANTEE: GILCHRIST ANTHONY G						
2360/0500	5/07/2020	WD	U	I	11	100
GRANTOR: TENNILLE TERRI G						
GRANTEE: ABACO TRUST						

BUILDING NOTES

BUILDING DIMENSIONS

BAS=[YR=1996] W26 S3 FSP=[YR=2005] W5 S20 E5 N20$ S23 E26 N26$ PTR=E15 UOP=[YR=1996] E5 FGR=[YR=1996] N3 E22 FOP=[YR=2005] E4 S4 W4 N4 $ S4 E4 S22 W26 N23 $ S20 W5 N20 $ W15 $.

EXTRA FEATURES

L N	OB/XF CODE	DESCRIPTION	BLD	CAP	L	W	UNITS	UT	Adj R	ADJ UNIT PRICE	ORIG COND	YEAR ON	YEAR ACTUAL	Q	% COND	OB/XF MKT VALUE	NOTES

LAND DESCRIPTION

TOTAL OB/XF 0

L N	USE CODE	CLS	LAND USE DESCRIPTION	CAP	R D	LOC ZONE	FRONT	DEPTH	TOT LND UTS	UNIT TYPE	D T	DPTH FACT	% COND	TOT ADJ	UNIT PRICE	ADJ UNIT PRICE	LAND VALUE	OTHER ADJUSTMENTS AND NOTES	YEAR	DENSITY	DECL	FRZ	YR	CONSRV

REVIEW DATE 08/20/2020 BY KWA Total Acres: 0.00 Total Land Value: 450,000 Market: 0 Agricultural: 0 Common: 450,000 PRINTED 08/02/2023 BY SYS