LOT 19
IN OR 1162/372
MARSH LAKES PB 5/159-167

DUBA STEPHEN C & MARCELLA
88007 MARSH LAKES COURT
FERNANDINA BEACH, FL 32034

**2023**

**37-2N-28-1320-0019-0000**

## NASSAU COUNTY PROPERTY



## BUILDING CHARACTERISTICS

| ELEMENT | CD | CONSTRUCTION |
|---|---|---|
| Exterior Wall | 16 | WD FR STUC 100 |
| Roof Structur | 08 | IRREGULAR 100 |
| Roof Cover | 03 | COMP SHNGL 100 |
| Interior Wall | 05 | DRYWALL 100 |
| Interior Floo | 12 | HARDWOOD 80 |
| Interior Floo | 11 | CLAY TILE 20 |
| Air Condition | 03 | CENTRAL 100 |
| Heating Type | 04 | AIR DUCTED 100 |
| Bedrooms | | 4 100 |
| Bathrooms | | 3 100 |
| Frame | 02 | WOOD FRAME 100 |
| Stories | 1.5 | 1.5 100 |
| Units | | 0 100 |
| Occupancy | 00 | NONE 100 |
| Quality | 01 | Quality Level 01 |

DOR CODE 0100 SINGLE FAMILY
MAP NUM | MKT AREA 04
NEIGHBORHOOD/LOC 4015.00

| AREA TYPE | TOTAL GROSS AREA | PCT OF BASE | TOT ADJ AREA | SUBAREA MARKET VALUE |
|---|---|---|---|---|
| BAS | 2,888 | 100 | 2,888 | 273,097 |
| FGR | 670 | 55 | 368 | 34,799 |
| FGR | 990 | 55 | 544 | 51,442 |
| FOP | 66 | 30 | 20 | 1,891 |
| FSP | 200 | 40 | 80 | 7,565 |
| FUS | 248 | 100 | 248 | 23,452 |
| UOP | 50 | 20 | 10 | 946 |
| UOP | 168 | 20 | 34 | 3,216 |
| UUS | 924 | 50 | 462 | 43,688 |
| TOTALS | 6,204 | | 4,654 | 440,094 |

## MARKET ADJUSTMENTS

| TYPE | MDL | EFF. AREA | TOT ADJ PTS | EFF. BASE RATE | REPL. COST NEW | AYB | EYB | ECON | FNCT | | NORM | % COND |
|---|---|---|---|---|---|---|---|---|---|---|---|---|
| 0900 | 01 | 4,654 | 89.4744 | 106.25 | 494,488 | 1998 | 2000 | 0 | 0 | 0 | 11.00 | 89.00 |

1 SNGL FAM – 100% - 2004 Heated Area: 3136 HX Base Yr 2004

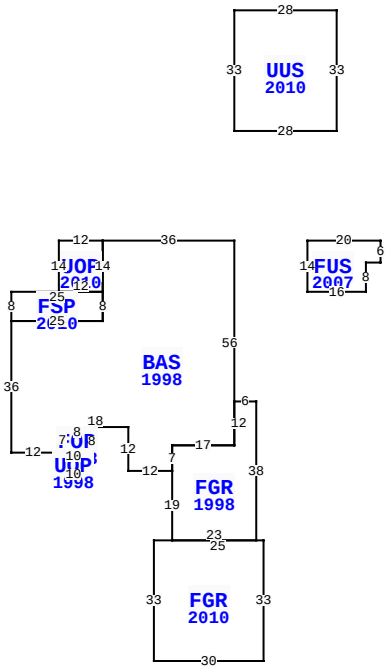


88007 MARSH LAKES CT, FERNANDINA BEACH

| | | | |
|---|---|---|---|
| BLD DATE | | LGL DATE | |
| XF DATE | | LAND DATE | |
| INC DATE | | AG DATE | |

## VALUATION SUMMARY

| | | |
|---|---|---|
| VALUATION BY | | STANDARD |
| Tax Group: 7 | Tax Dist: | |
| BUILDING MARKET VALUE | | 440,094 |
| TOTAL MARKET OB/XF VALUE | | 86,820 |
| TOTAL LAND VALUE - MARKET | | 185,000 |
| TOTAL MARKET VALUE | | 711,914 |
| SOH/AGL Deduction | | 197,621 |
| ASSESSED VALUE | | 514,293 |
| TOTAL EXEMPTION VALUE | HX HB | 50,000 |
| BASE TAXABLE VALUE | | 464,293 |
| TOTAL JUST VALUE | | 711,914 |
| NCON VALUE | | 0 |
| INCOME VALUE | | |
| PREVIOUS YEAR MKT VALUE | | 721,813 |

| PERMIT NUM | DESCRIPTION | AMT | ISSUED |
|---|---|---|---|
| B230006812 | SCN ENC | 35,500 | 05/24/2023 |
| B23704 | GARAGE | 73,591 | 06/01/2010 |
| B20392 | SCRN ENCL | 10,000 | 08/01/2007 |
| B19805 | SWIM POOL | 42,000 | 04/01/2007 |
| 974498 | NEW CONSTR | 156,772 | 12/01/1997 |

## SALES DATA

| OFF RECORD Number | DATE | TYPE INST | Q U | V I | RSN CD | SALE PRICE |
|---|---|---|---|---|---|---|
| 1162/0372 | 8/13/2003 | WD | Q | I | | 485,000 |
| GRANTOR: MCCRANIE DANIEL I JR | | | | | | |
| GRANTEE: DUBA STEPHEN C & MA | | | | | | |
| 1037/0777 | 2/14/2002 | WD | Q | I | | 385,000 |
| GRANTOR: DUPREY ROBERT F & KAT | | | | | | |
| GRANTEE: MCCRANIE DANIEL JR | | | | | | |

## BUILDING NOTES

## BUILDING DIMENSIONS

BAS=[YR=1998] W36UOP=[YR=2010] W12 S14 E12 N14$ S14 FSP=[YR=2010] W25 S8E25 N8$S8 W25 S36 E12 FOP=[YR=1998] S1 UOP=[YR=1998] S5 E10 N5 W10$ E10 N8 W8 S7 W2 $E2 N7 E18 S12 E12 FGR=[YR=1998] S19FGR=[YR=2010] W5 S33 E30 N33 W25 $ E23 N38 W6 S12 W17S7 $ N7 E17 N56 $ PTR=E20 FUS=[YR=2007] E20 S6 W4 S8 W16 N14$ W20$ PTR= N30 UUS=[YR=2010] N33 E28 S33 W28 $ S30 $.

## EXTRA FEATURES

| LN | OB/XF CODE | DESCRIPTION | BLD | CAP | L | W | UNITS | UT | Adj R | ADJ UNIT PRICE | ORIG COND | YEAR ON | YEAR ACTUAL | Q | % COND | OB/XF MKT VALUE | NOTES |
|---|---|---|---|---|---|---|---|---|---|---|---|---|---|---|---|---|---|
| 1 | 0500 | FP-PRE FAB | 0 | 100 | 0 | 0 | 1.00 | UT | 3,500.00 | 3,500.00 | 100 | 1998 | 1998 | 3 | 83 | 2,905 | |
| 4 | 0861 | POOL GUNIT | 0 | 100 | 0 | 0 | 450.00 | SF | 85.00 | 85.00 | 100 | 2007 | 2007 | 3 | 52 | 19,890 | |
| 5 | 0911 | SCRN RM A | 0 | 100 | 0 | 0 | 1,254.00 | SF | 17.50 | 17.50 | 100 | 2007 | 2007 | 3 | 35 | 7,681 | |
| 6 | 0871 | POOL HTR R | 0 | 100 | 0 | 0 | 1.00 | UT | 2,000.00 | 2,000.00 | 100 | 2007 | 2007 | 3 | 35 | 700 | |
| 7 | 0877 | JACUZZI | 0 | 100 | 0 | 0 | 1.00 | UT | 3,000.00 | 3,000.00 | 100 | 2007 | 2007 | 3 | 35 | 1,050 | |
| 8 | 0855 | CONC PAVER | 0 | 100 | 0 | 0 | 804.00 | SF | 10.00 | 10.00 | 100 | 2007 | 2007 | 3 | 89 | 7,156 | |
| 9 | 0300 | BOAT DCK W | 0 | 100 | 0 | 0 | 917.00 | SF | 40.00 | 40.00 | 100 | 2007 | 2007 | 3 | 52 | 19,074 | |
| 10 | 0855 | CONC PAVER | 0 | 100 | 0 | 0 | 3,083.00 | SF | 10.00 | 10.00 | 100 | 2010 | 2010 | 3 | 92 | 28,364 | |

## LAND DESCRIPTION

TOTAL OB/XF 86,820

| LN | USE CODE | CLS | LAND USE DESCRIPTION | CAP | RD | LOC ZONE | FRONT | DEPTH | TOT LND UTS | UNIT TYPE | DT | DPTH FACT | % COND | TOT ADJ | UNIT PRICE | ADJ UNIT PRICE | LAND VALUE | OTHER ADJUSTMENTS AND NOTES | YEAR | DENSITY | DECL | FRZ | YR | CONSRV |
|---|---|---|---|---|---|---|---|---|---|---|---|---|---|---|---|---|---|---|---|---|---|---|---|---|
| 1 | 000116 | C | SFR MARSH | 100 | | RS-1 | 0.00 | 0.00 | 1.00 | LT | | 1.00 | 1.00 | 1.00 | 185,000.00 | 185,000.00 | 185,000 | | | | | | | |

REVIEW DATE 01/31/2017 BY KW Total Acres: 0.00 Total Land Value: 185,000 Market: 0 Agricultural: 0 Common: 185,000 PRINTED 08/02/2023 BY SYS