LOT 11
MARSH LAKES PB 5/159-167

GARIBOLDI LISA A REV TRUST/GARIBOLDI LISA A TRUSTE
96080 MARSH LAKES DRIVE
FERNANDINA BEACH, FL 32034

2023

37-2N-28-1320-0011-0000

NASSAU COUNTY PROPERTY

BUILDING CHARACTERISTICS

ELEMENT	CD	CONSTRUCTION
Exterior Wall	31	HARDIE BRD 100
Roof Structur	08	IRREGULAR 100
Roof Cover	03	COMP SHNGL 100
Interior Wall	05	DRYWALL 100
Interior Floo	14	CARPET 70
Interior Floo	12	HARDWOOD 30
Air Condition	03	CENTRAL 100
Heating Type	04	AIR DUCTED 100
Bedrooms		4 100
Bathrooms		3.5 100
Frame	02	WOOD FRAME 100
Stories	2.	2. 100
Units		0 100
Occupancy	00	NONE 100
Quality	01	Quality Level 01
DOR CODE	0100	SINGLE FAMILY
MAP NUM		MKT AREA 04
NEIGHBORHOOD/LOC	4015.00	

AREA TYPE	TOTAL GROSS AREA	PCT OF BASE	TOT ADJ AREA	SUBAREA MARKET VALUE
BAS	1,877	100	1,877	180,674
FGR	572	55	315	30,321
FOP	78	30	23	2,214
FOP	105	30	32	3,080
FOP	480	30	144	13,861
FSP	128	40	51	4,909
FUS	1,320	100	1,320	127,059
UOP	24	20	5	481
UOP	162	20	32	3,080
UST	160	45	72	6,930
TOTALS	4,906		3,871	372,611

MARKET ADJUSTMENTS

TYPE	MDL	EFF. AREA	TOT ADJ PTS	EFF. BASE RATE	REPL. COST NEW	AYB	EYB	ECON	FNCT		NORM	% COND
0900	01	3,871	90.3150	107.25	415,165	1999	2001	0	0	0	10.25	89.75

1 SNGL FAM – 100% - 2021 Heated Area: 3197 HX Base Yr 2021

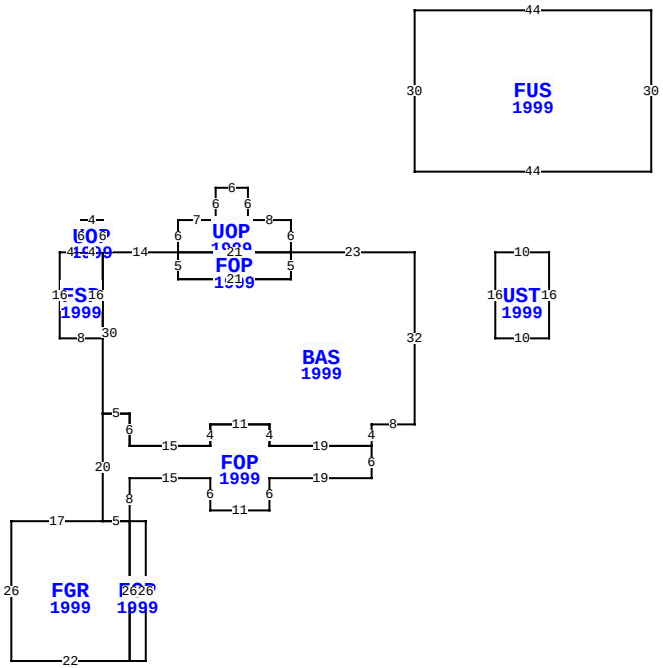

96080 MARSH LAKES DR, FERNANDINA BEACH

BLD DATE		LGL DATE	
XF DATE		LAND DATE	
INC DATE		AG DATE	

VALUATION SUMMARY

VALUATION BY		STANDARD
Tax Group: 7	Tax Dist:	
BUILDING MARKET VALUE		372,611
TOTAL MARKET OB/XF VALUE		14,075
TOTAL LAND VALUE - MARKET		185,000
TOTAL MARKET VALUE		571,686
SOH/AGL Deduction		210,317
ASSESSED VALUE		361,369
TOTAL EXEMPTION VALUE	HX HB	50,000
BASE TAXABLE VALUE		311,369
TOTAL JUST VALUE		571,686
NCON VALUE		0
INCOME VALUE		
PREVIOUS YEAR MKT VALUE		593,405

PERMIT NUM	DESCRIPTION	AMT	ISSUED
M2007265	H/AC	0	08/01/2020
9905817	NEW CONSTR	273,000	02/01/1999

SALES DATA

OFF RECORD Number	DATE	TYPE INST	Q U	V I	RSN CD	SALE PRICE
2380/0663	7/30/2020	WD	Q	I	01	633,800
GRANTOR: HANEY BROOKS R & ASHL						
GRANTEE: GARIBOLDI LISA A RE						
0807/0516	9/23/1997	WD	Q	V		34,300
GRANTOR: AMELIA ISLAND CO						
GRANTEE: HANEY BROOKS R & AS						

BUILDING NOTES

BUILDING DIMENSIONS

BAS=[YR=1999] W23 UOP=[YR=1999] N6 W8 N6 W6 S6 W7 S6 FOP=[YR=1999] S5 E21 N5 W21$ E21$ S5 W21 N5 W14 UOP=[YR=1999] N6 W4 S6 FSP=[YR=1999] W4 S16 E8 N16 W4$ E4$ S30 FOP=[YR=1999] S20 FGR=[YR=1999] W17 S26 E22 FOP=[YR=1999] E3 N26 W3 S26$ N26 W5$ E5 N8 E15 S6 E11 N6 E19 N6 W19 N4 W11 S4 W15 N6 W5$ E5 S6 E15 N4 E11 S4 E19 N4 E8 N32$ PTR=N15 FUS=[YR=1999] N30 E44 S30 W44$ S15$ PTR=E15 UST=[YR=1999] E10 S16 W10 N16$ W15$.

EXTRA FEATURES

LN	OB/XF CODE	DESCRIPTION	BLD	CAP	L	W	UNITS	UT	Adj R	ADJ UNIT PRICE	ORIG COND	YEAR ON	YEAR ACTUAL	Q	% COND	OB/XF MKT VALUE	NOTES
1	0810	CONCRETE A	0	100	0	0	2,149.00	SF	6.50	6.50	100	1999	1999	3	79	11,035	
2	1242	WD DECK A	0	100	10	5	50.00	SF	10.00	10.00	100	1999	1999	3	20	100	
3	0500	FP-PRE FAB	0	100	0	0	1.00	UT	3,500.00	3,500.00	100	1999	1999	3	84	2,940	

LAND DESCRIPTION

TOTAL OB/XF 14,075

LN	USE CODE	CLS	LAND USE DESCRIPTION	CAP	RD	LOC ZONE	FRONT	DEPTH	TOT LND UTS	UNIT TYPE	DT	DPTH FACT	% COND	TOT ADJ	UNIT PRICE	ADJ UNIT PRICE	LAND VALUE	OTHER ADJUSTMENTS AND NOTES	YEAR	DENSITY	DECL	FRZ	YR	CONSRV
1	000116	C	SFR MARSH	100		RS-1	0.00	0.00	1.00	LT		1.00	1.00	1.00	185,000.00	185,000.00	185,000							

REVIEW DATE 10/16/2018 BY DJX Total Acres: 0.00 Total Land Value: 185,000 Market: 0 Agricultural: 0 Common: 185,000 PRINTED 08/02/2023 BY SYS