BLOCK 1 LOT 26
IN OR 1354/744
SHEFFIELD VILLAGE PB 5/28 & 29

SLOAN EDWIN C & ETHEL A
54227 HAZEL JONES RD
CALLAHAN, FL 32011

**2023**

**37-1N-25-299S-0001-0260**

## NASSAU COUNTY PROPERTY



## BUILDING CHARACTERISTICS

| ELEMENT | CD | CONSTRUCTION |
|---|---|---|
| Exterior Wall | 20 | FACE BRICK 100 |
| Roof Structur | 03 | GABLE/HIP 100 |
| Roof Cover | 03 | COMP SHNGL 100 |
| Interior Wall | 05 | DRYWALL 100 |
| Interior Floo | 14 | CARPET 80 |
| Interior Floo | 13 | LVT/LAMNT 20 |
| Air Condition | 03 | CENTRAL 100 |
| Heating Type | 04 | AIR DUCTED 100 |
| Bedrooms | | 3 100 |
| Bathrooms | | 2.5 100 |
| Frame | 02 | WOOD FRAME 100 |
| Stories | 1.5 | 1.5 100 |
| Units | | 0 100 |
| Occupancy | 00 | NONE 100 |
| Quality | 03 | Quality Level 03 |
| DOR CODE | 0100 | SINGLE FAMILY |
| MAP NUM | | MKT AREA 08 |
| NEIGHBORHOOD/LOC | 8026.00 | |

| AREA TYPE | TOTAL GROSS AREA | PCT OF BASE | TOT ADJ AREA | SUBAREA MARKET VALUE |
|---|---|---|---|---|
| BAS | 1,839 | 100 | 1,839 | 186,355 |
| FGR | 662 | 55 | 364 | 36,886 |
| FOP | 204 | 30 | 61 | 6,182 |
| FUS | 216 | 100 | 216 | 21,889 |
| PTO | 240 | 5 | 12 | 1,216 |
| TOTALS | 3,161 | | 2,492 | 252,527 |

## MARKET ADJUSTMENTS

| TYPE | MDL | EFF. AREA | TOT ADJ PTS | EFF. BASE RATE | REPL. COST NEW | AYB | EYB | ECON | FNCT | | NORM | % COND |
|---|---|---|---|---|---|---|---|---|---|---|---|---|
| 0900 | 01 | 2,492 | 105.0240 | 124.72 | 310,802 | 1992 | 1997 | 0 | 0 | 0 | 18.75 | 81.25 |

1 SNGL FAM – 100% - 2006 Heated Area: 2055 HX Base Yr 2006

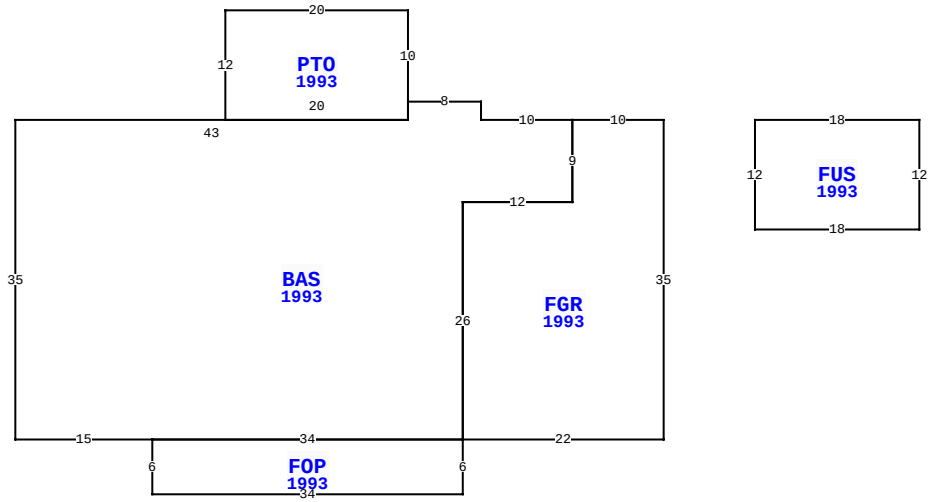


54227 HAZEL JONES RD, CALLAHAN

| | | | |
|---|---|---|---|
| BLD DATE | | LGL DATE | |
| XF DATE | | LAND DATE | |
| INC DATE | | AG DATE | |

## VALUATION SUMMARY

| | | |
|---|---|---|
| VALUATION BY | | STANDARD |
| Tax Group: 6 | Tax Dist: | |
| BUILDING MARKET VALUE | | 252,527 |
| TOTAL MARKET OB/XF VALUE | | 32,746 |
| TOTAL LAND VALUE - MARKET | | 45,000 |
| TOTAL MARKET VALUE | | 330,273 |
| SOH/AGL Deduction | | 174,019 |
| ASSESSED VALUE | | 156,254 |
| TOTAL EXEMPTION VALUE | HX HB VX | 55,000 |
| BASE TAXABLE VALUE | | 101,254 |
| TOTAL JUST VALUE | | 330,273 |
| NCON VALUE | | 0 |
| INCOME VALUE | | |
| PREVIOUS YEAR MKT VALUE | | 251,277 |

| PERMIT NUM | DESCRIPTION | AMT | ISSUED |
|---|---|---|---|
| 21014050 | REPAIR/RRF | 0 | 10/13/2021 |
| B995748 | GARAGE | 28,125 | 01/02/1999 |

## SALES DATA

| OFF RECORD Number | DATE | TYPE INST | Q U / | V I / | RSN CD | SALE PRICE |
|---|---|---|---|---|---|---|
| 1354/0744 | 9/30/2005 | WD | Q | I | | 239,000 |
| GRANTOR: CARROLL FRED | | | | | | |
| GRANTEE: SLOAN EDWIN C & ETH | | | | | | |
| 0860/0674 | 12/23/1998 | WD | Q | I | | 150,000 |
| GRANTOR: ANDERSON GARY MICHAEL | | | | | | |
| GRANTEE: CARROLL FRED & BARB | | | | | | |

## BUILDING NOTES

## BUILDING DIMENSIONS

FGR=[YR=1993] W10 BAS=[YR=1993] W10 N2 W8 PTO=[YR=1993] N10 W20 S12 E20 N2$ S2 W43 S35 E15 FOP=[YR=1993] S6 E34 N6 W34$ E34 N26 E12 N9$ S9 W12 S26 E22 N35$ PTR=E10 FUS=[YR=1993] E18 S12 W18 N12 $ W10 $ .

## EXTRA FEATURES

| LN | OB/XF CODE | DESCRIPTION | BLD | CAP | L | W | UNITS | UT | Adj R | ADJ UNIT PRICE | ORIG COND | YEAR ON | YEAR ACTUAL | Q | % COND | OB/XF MKT VALUE | NOTES |
|---|---|---|---|---|---|---|---|---|---|---|---|---|---|---|---|---|---|
| 1 | 0500 | FP-PRE FAB | 0 | 100 | 0 | 0 | 1.00 | UT | 3,500.00 | 3,500.00 | 100 | 1992 | 1992 | 3 | 74 | 2,590 | |
| 2 | 0810 | CONCRETE A | 0 | 100 | 0 | 0 | 400.00 | SF | 6.50 | 6.50 | 100 | 1994 | 1994 | 3 | 70 | 1,820 | |
| 3 | 0812 | CONCRETE C | 0 | 100 | 0 | 0 | 5,002.00 | SF | 4.00 | 4.00 | 100 | 1999 | 1999 | 3 | 79 | 15,806 | |
| 4 | 0510 | GARAGE WD- | 0 | 100 | 0 | 0 | 1,150.00 | SF | 35.00 | 35.00 | 100 | 1999 | 1999 | 3 | 28 | 11,270 | |
| 5 | 0911 | SCRN RM A | 0 | 100 | 24 | 15 | 360.00 | SF | 17.50 | 17.50 | 100 | 1998 | 1998 | 3 | 20 | 1,260 | |

## LAND DESCRIPTION

TOTAL OB/XF 32,746

| LN | USE CODE | CLS | LAND USE DESCRIPTION | CAP | RD | LOC ZONE | FRONT | DEPTH | TOT LND UTS | UNIT TYPE | DT | DPTH FACT | % COND | TOT ADJ | UNIT PRICE | ADJ UNIT PRICE | LAND VALUE | OTHER ADJUSTMENTS AND NOTES | YEAR | DENSITY | DECL | FRZ | YR | CONSRV |
|---|---|---|---|---|---|---|---|---|---|---|---|---|---|---|---|---|---|---|---|---|---|---|---|---|
| 1 | 000140 | C | SFR GOLF A | 100 | 0006 | | 0.00 | 0.00 | 1.00 | LT | | 1.00 | 1.00 | 1.00 | 45,000.00 | 45,000.00 | 45,000 | | | | | | | |

REVIEW DATE 04/13/2020 BY KBA Total Acres: 0.00 Total Land Value: 45,000 Market: 0 Agricultural: 0 Common: 45,000 PRINTED 08/02/2023 BY SYS