LOT 30
IN OR 1804/18
NASSAU VILLAGE 3

FORREST DONALD B TRUST/FORREST DONALD B TRUSTEE
54372 JONAS DR
CALLAHAN, FL 32011

2023

37-1N-25-299C-0030-0000

BUILDING CHARACTERISTICS

ELEMENT	CD	CONSTRUCTION
Exterior Wall	19	COMMON BRK 100
Roof Structur	03	GABLE/HIP 100
Roof Cover	12	MODULAR MT 100
Interior Wall	05	DRYWALL 80
Interior Wall	04	PLYWOOD 20
Interior Floo	14	CARPET 70
Interior Floo	08	SHT VINYL 30
Air Condition	03	CENTRAL 100
Heating Type	04	AIR DUCTED 100
Bedrooms		3 100
Bathrooms		2.5 100
Frame	02	WOOD FRAME 100
Stories	1.	1. 100
Units		0 100
BUD8 Adjustme	06	DIST 1D 100
Occupancy	00	NONE 100
Quality	03	Quality Level 03
DOR CODE	0100	SINGLE FAMILY
MAP NUM		MKT AREA 08
NEIGHBORHOOD/LOC	8026.00	

AREA TYPE	TOTAL GROSS AREA	PCT OF BASE	TOT ADJ AREA	SUBAREA MARKET VALUE
BAS	2,277	100	2,277	173,147
FOP	10	30	3	228
FOP	21	30	6	456
FOP	27	30	8	608
UOP	176	20	35	2,661
USP	352	30	106	8,060
TOTALS	2,863		2,435	185,162

MARKET ADJUSTMENTS

TYPE	MDL	EFF. AREA	TOT ADJ PTS	EFF. BASE RATE	REPL. COST NEW	AYB	EYB	ECON	FNCT		NORM	% COND
0100	01	2,435	123.0000	111.01	270,309	1979	1979	0	0	0	31.50	68.50

1 SINGLE FAM – 100% - 0 Heated Area: 2277 HX Base Yr

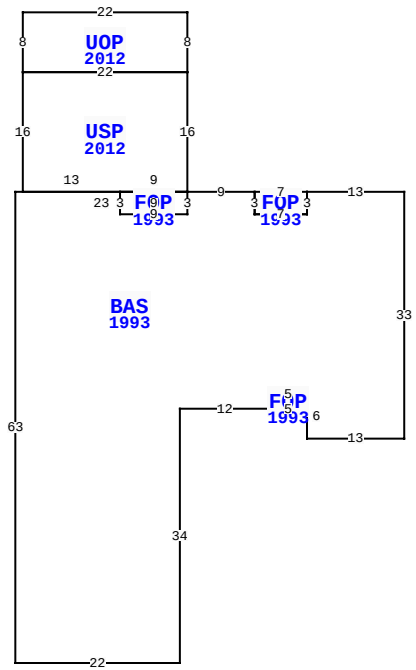

54372 JONAS DR, CALLAHAN

BLD DATE		LGL DATE	
XF DATE		LAND DATE	
INC DATE		AG DATE	

NASSAU COUNTY PROPERTY

PAGE 1 of 1 6

VALUATION SUMMARY

VALUATION BY		STANDARD
Tax Group: 6	Tax Dist:	
BUILDING MARKET VALUE		185,162
TOTAL MARKET OB/XF VALUE		19,143
TOTAL LAND VALUE - MARKET		45,000
TOTAL MARKET VALUE		249,305
SOH/AGL Deduction		104,174
ASSESSED VALUE		145,131
TOTAL EXEMPTION VALUE	HX HB WR	55,000
BASE TAXABLE VALUE		90,131
TOTAL JUST VALUE		249,305
NCON VALUE		0
INCOME VALUE		
PREVIOUS YEAR MKT VALUE		208,879

PERMIT NUM	DESCRIPTION	AMT	ISSUED

SALES DATA

OFF RECORD Number	DATE	TYPE INST	Q U /	V I /	RSN CD	SALE PRICE
1804/0018	1/17/2012	WD	U	I	30	100
GRANTOR: FORREST DONALD B & CH						
GRANTEE: FORREST DONALD B &						
0310/0697	4/01/1980	WD	U	V		5,400
GRANTOR:						
GRANTEE:						

BUILDING NOTES

BUILDING DIMENSIONS

BAS=[YR=1993] W13 FOP=[YR=1993] W7 S3 E7 N3$ S3 W7 N3 W9
USP=[YR=2012] N16 UOP=[YR=2012] N8 W22 S8 E22$ W22 S16 E13
FOP=[YR=1993] S3 E9 N3 W9$ E9$ W23 S63 E22 N34 E12
FOP=[YR=1993] E5 N2 W5 S2$ N2 E5 S6 E13 N33$.

EXTRA FEATURES

LN	OB/XF CODE	DESCRIPTION	BLD	CAP	L	W	UNITS	UT	Adj R	ADJ UNIT PRICE	ORIG COND	YEAR ON	YEAR ACTUAL	Q	% COND	OB/XF MKT VALUE	NOTES
1	0500	FP-PRE FAB	0	100	0	0	1.00	UT	3,500.00	3,500.00	100	1979	1979	3	46.5	1,628	
2	0812	CONCRETE C	0	100	0	0	1,254.00	SF	4.00	4.00	100	1980	1980	3	35	1,756	
4	0680	POLE SHED	0	100	18	33	594.00	SF	10.00	10.00	100	1988	1988	3	20	1,188	
5	0510	GARAGE WD-	0	100	24	30	720.00	SF	35.00	35.00	100	2000	2000	3	29	7,308	
6	0811	CONCRETE B	0	100	0	0	1,746.00	SF	5.20	5.20	100	2000	2000	3	80	7,263	

LAND DESCRIPTION

TOTAL OB/XF 19,143

LN	USE CODE	CLS	LAND USE DESCRIPTION	CAP	RD	LOC ZONE	FRONT	DEPTH	TOT LND UTS	UNIT TYPE	DT	DPTH FACT	% COND	TOT ADJ	UNIT PRICE	ADJ UNIT PRICE	LAND VALUE	OTHER ADJUSTMENTS AND NOTES	YEAR	DENSITY	DECL	FRZ	YR	CONSRV
1	000100	C	SFR	100		RM	0.00	0.00	1.00	LT		1.00	1.00	1.00	45,000.00	45,000.00	45,000							

REVIEW DATE 05/04/2017 BY KBX Total Acres: 0.00 Total Land Value: 45,000 Market: 0 Agricultural: 0 Common: 45,000 PRINTED 08/02/2023 BY SYS