LOT 4
IN OR 327 PG 179
NASSAU VILLAGE 1 UNR

WILLIAMS DIANE
54083 VONTZ CIRCLE
CALLAHAN, FL 32011

2023

37-1N-25-299A-0004-0000

BUILDING CHARACTERISTICS

ELEMENT	CD	CONSTRUCTION
Exterior Wall	19	COMMON BRK 70
Exterior Wall	05	AVERAGE 30
Roof Structur	03	GABLE/HIP 100
Roof Cover	03	COMP SHNGL 100
Interior Wall	05	DRYWALL 70
Interior Wall	04	PLYWOOD 30
Interior Floo	14	CARPET 80
Interior Floo	08	SHT VINYL 20
Air Condition	03	CENTRAL 100
Heating Type	04	AIR DUCTED 100
Bedrooms		3 100
Bathrooms		3 100
Frame	02	WOOD FRAME 100
Stories	1.	1. 100
Units		0 100
BUD8 Adjustme	06	DIST 1D 100
Occupancy	00	NONE 100
Quality	03	Quality Level 03
DOR CODE	0100	SINGLE FAMILY
MAP NUM		MKT AREA 08
NEIGHBORHOOD/LOC	8026.00	

AREA TYPE	TOTAL GROSS AREA	PCT OF BASE	TOT ADJ AREA	SUBAREA MARKET VALUE
BAS	900	100	900	90,848
BAS	1,551	100	1,551	156,561
FSP	264	40	106	10,699
TOTALS	2,715		2,557	258,108

MARKET ADJUSTMENTS

TYPE	MDL	EFF. AREA	TOT ADJ PTS	EFF. BASE RATE	REPL. COST NEW	AYB	EYB	ECON	FNCT		NORM	% COND
0900	01	2,557	113.1840	134.41	343,686	1973	1985	0	0	0	24.90	75.10

1 SNGL FAM – 100% - 0 Heated Area: 2451 HX Base Yr

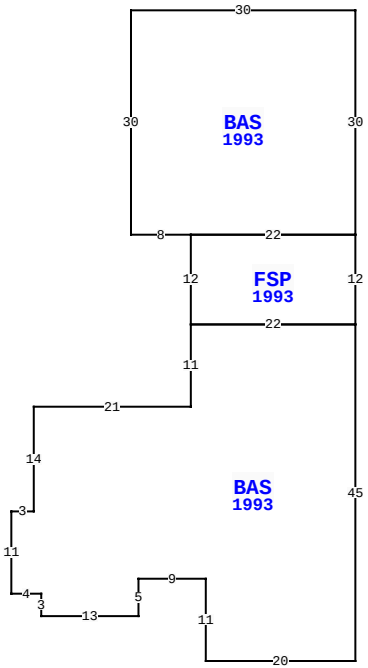

54083 VONTZ CIR, CALLAHAN

BLD DATE		LGL DATE	
XF DATE		LAND DATE	
INC DATE		AG DATE	

NASSAU COUNTY PROPERTY

PAGE 1 of 1 6

VALUATION SUMMARY

VALUATION BY		STANDARD
Tax Group: 6	Tax Dist:	
BUILDING MARKET VALUE		258,108
TOTAL MARKET OB/XF VALUE		7,196
TOTAL LAND VALUE - MARKET		45,000
TOTAL MARKET VALUE		310,304
SOH/AGL Deduction		195,689
ASSESSED VALUE		114,615
TOTAL EXEMPTION VALUE	HX HB WX	55,000
BASE TAXABLE VALUE		59,615
TOTAL JUST VALUE		310,304
NCON VALUE		0
INCOME VALUE		
PREVIOUS YEAR MKT VALUE		246,055

PERMIT NUM	DESCRIPTION	AMT	ISSUED
5618	NEW CONSTR	54,423	04/07/1989

SALES DATA

OFF RECORD Number	DATE	TYPE INST	Q / U	V / I	RSN CD	SALE PRICE
0327/0179	12/01/1980	WD	U	V		2,900

GRANTOR:

GRANTEE:

BUILDING NOTES

BUILDING DIMENSIONS

BAS=[YR=1993] W30 S30 E8 FSP=[YR=1993] S12 BAS=[YR=1993] S11W21 S14 W3 S11 E4 S3 E13 N5 E9S11 E20 N45 W22$ E22 N12 W22$ E22 N30$.

EXTRA FEATURES

LN	OB/XF CODE	DESCRIPTION	BLD	CAP	L	W	UNITS	UT	Adj R	ADJ UNIT PRICE	ORIG COND	YEAR ON	YEAR ACTUAL	Q	% COND	OB/XF MKT VALUE	NOTES
1	1242	WD DECK A	0	100	0	0	216.00	SF	10.00	10.00	100	1989	1989	3	20	432	
2	0812	CONCRETE C	0	100	0	0	2,842.00	SF	4.00	4.00	100	1989	1989	3	59.5	6,764	

LAND DESCRIPTION

TOTAL OB/XF 7,196

LN	USE CODE	CLS	LAND USE DESCRIPTION	CAP	RD	LOC ZONE	FRONT	DEPTH	TOT LND UTS	UNIT TYPE	DT	DPTH FACT	% COND	TOT ADJ	UNIT PRICE	ADJ UNIT PRICE	LAND VALUE	OTHER ADJUSTMENTS AND NOTES	YEAR	DENSITY	DECL	FRZ	YR	CONSRV
1	000100	C	SFR	100	0006	RM	126.00	348.00	1.00	LT		1.00	1.00	1.00	45,000.00	45,000.00	45,000							

REVIEW DATE 08/04/2021 BY KBA Total Acres: 0.00 Total Land Value: 45,000 Market: 0 Agricultural: 0 Common: 45,000 PRINTED 08/02/2023 BY SYS