TRACT 12
IN OR 2589/743
LEE STONER SHORES 1 UNR

SCOTT JUSTIN TYLER
54027 MARLEE ROAD
CALLAHAN, FL 32011

2023

37-1N-25-296A-0012-0000

NASSAU COUNTY PROPERTY

BUILDING CHARACTERISTICS

ELEMENT	CD	CONSTRUCTION
Exterior Wall	12	CEDAR 100
Roof Structur	03	GABLE/HIP 100
Roof Cover	03	COMP SHNGL 100
Interior Wall	05	DRYWALL 100
Interior Floo	14	CARPET 60
Interior Floo	11	CLAY TILE 40
Air Condition	03	CENTRAL 100
Heating Type	04	AIR DUCTED 100
Bedrooms		3 100
Bathrooms		2 100
Frame	02	WOOD FRAME 100
Stories	1.	1. 100
Units		0 100
Occupancy	00	NONE 100
Quality	01	Quality Level 01

DOR CODE 0100 SINGLE FAMILY
MAP NUM | MKT AREA 08
NEIGHBORHOOD/LOC 8026.00

AREA TYPE	TOTAL GROSS AREA	PCT OF BASE	TOT ADJ AREA	SUBAREA MARKET VALUE
BAS	1,356	100	1,356	153,691
FGR	400	55	220	24,935
FOP	55	30	16	1,813
FOP	56	30	17	1,927
TOTALS	1,867		1,609	182,365

MARKET ADJUSTMENTS

TYPE	MDL	EFF. AREA	TOT ADJ PTS	EFF. BASE RATE	REPL. COST NEW	AYB	EYB	ECON	FNCT		NORM	% COND
0900	01	1,609	110.3436	131.03	210,827	1991	1995	0	0	0	13.50	86.50

1 SNGL FAM – 0% - 2023 Heated Area: 1356 HX Base Yr

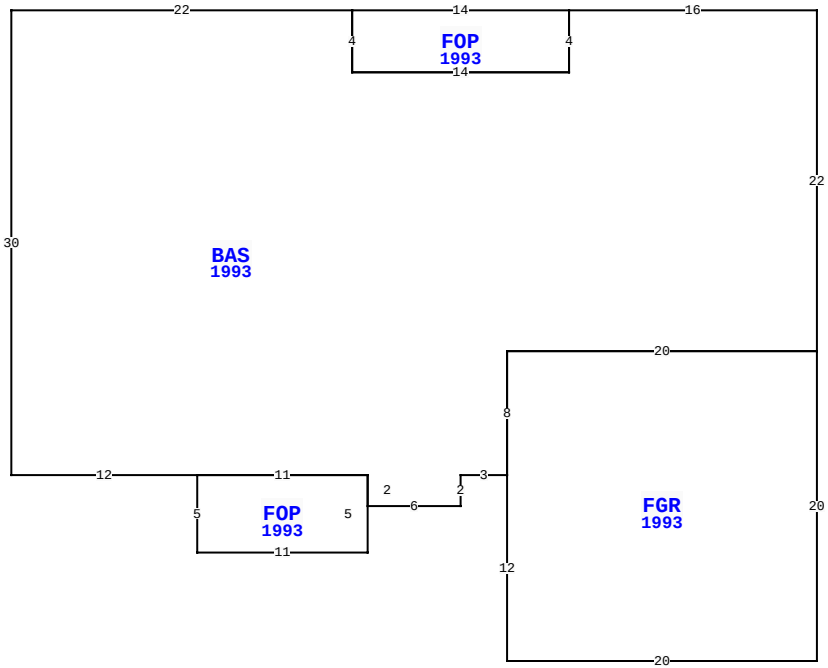

54027 MARLEE RD, CALLAHAN

BLD DATE		LGL DATE	
XF DATE		LAND DATE	
INC DATE		AG DATE	

VALUATION SUMMARY

VALUATION BY	STANDARD
Tax Group: 6	Tax Dist:
BUILDING MARKET VALUE	182,365
TOTAL MARKET OB/XF VALUE	19,023
TOTAL LAND VALUE - MARKET	45,000
TOTAL MARKET VALUE	246,388
SOH/AGL Deduction	0
ASSESSED VALUE	246,388
TOTAL EXEMPTION VALUE	0
BASE TAXABLE VALUE	246,388
TOTAL JUST VALUE	246,388
NCON VALUE	0
INCOME VALUE	
PREVIOUS YEAR MKT VALUE	191,393

PERMIT NUM	DESCRIPTION	AMT	ISSUED
B12435	XFOB	10,000	03/01/2004
6892	NEW CONSTR	55,950	12/11/1990

SALES DATA

OFF RECORD Number	DATE	TYPE INST	Q U	V I	RSN CD	SALE PRICE
2589/0743	9/02/2022	WD	Q	I	01	317,000
GRANTOR: ROZIER SHAYANNE K F/K						
GRANTEE: SCOTT JUSTIN TYLER						
2153/1504	10/13/2017	WD	Q	I	01	175,000
GRANTOR: MCINTYRE CHERYL Y & J						
GRANTEE: TODD SHYANNE K						

BUILDING NOTES

BUILDING DIMENSIONS

BAS=[YR=1993] W16 FOP=[YR=1993] W14 S4 E14 N4$ S4 W14 N4 W22 S30 E12 FOP=[YR=1993] S5 E11 N5 W11$ E11 S2 E6 N2 E3 FGR=[YR=1993] S12 E20 N20 W20 S8$ N8 E20 N22$.

EXTRA FEATURES

LN	OB/XF CODE	DESCRIPTION	BLD	CAP	L	W	UNITS	UT	Adj R	ADJ UNIT PRICE	ORIG COND	YEAR ON	YEAR ACTUAL	Q	% COND	OB/XF MKT VALUE	NOTES
1	1242	WD DECK A	0	0	18	18	324.00	SF	10.00	10.00	100	1995	1995	3	20	648	
2	0525	GAZEBO	0	0	0	0	1.00	UT	5,000.00	5,000.00	100	2001	2001	3	30	1,500	
3	0851	PATIO STON	0	0	0	0	345.00	SF	0.75	0.75	100	2001	2001	3	82	212	
4	0812	CONCRETE C	0	0	0	0	4,844.00	SF	4.00	4.00	100	2004	2004	3	86	16,663	

LAND DESCRIPTION

TOTAL OB/XF 19,023

LN	USE CODE	CLS	LAND USE DESCRIPTION	CAP	RD	LOC ZONE	FRONT	DEPTH	TOT LND UTS	UNIT TYPE	DT	DPTH FACT	% COND	TOT ADJ	UNIT PRICE	ADJ UNIT PRICE	LAND VALUE	OTHER ADJUSTMENTS AND NOTES	YEAR	DENSITY	DECL	FRZ	YR	CONSRV
1	000100	C	SFR	0		RM	150.00	225.00	1.00	LT		1.00	1.00	1.00	45,000.00	45,000.00	45,000							

REVIEW DATE 04/25/2016 BY KB Total Acres: 0.00 Total Land Value: 45,000 Market: 0 Agricultural: 0 Common: 45,000 PRINTED 08/02/2023 BY SYS