LOT 54
IN OR 2244/678
DEERFIELD ACRES PB 5/299

MCCRACKEN JONATHAN
54170 JESSICA PL
CALLAHAN, FL 32011

**2023**

**37-1N-25-0340-0054-0000**

## NASSAU COUNTY PROPERTY



## BUILDING CHARACTERISTICS

| ELEMENT | CD | CONSTRUCTION |
|---|---|---|
| Exterior Wall | 05 | AVERAGE 100 |
| Roof Structur | 03 | GABLE/HIP 100 |
| Roof Cover | 03 | COMP SHNGL 100 |
| Interior Wall | 05 | DRYWALL 100 |
| Interior Floo | 14 | CARPET 70 |
| Interior Floo | 14 | CARPET 30 |
| Air Condition | 03 | CENTRAL 100 |
| Heating Type | 04 | AIR DUCTED 100 |
| Bedrooms | | 3 100 |
| Bathrooms | | 2 100 |
| Frame | 02 | WOOD FRAME 100 |
| Stories | 1. | 1. 100 |
| Units | | 0 100 |
| Occupancy | 00 | NONE 100 |
| Quality | 06 | Quality Level 06 |
| DOR CODE | 0100 | SINGLE FAMILY |
| MAP NUM | | MKT AREA 08 |
| NEIGHBORHOOD/LOC | 8027.00 | |

| AREA TYPE | TOTAL GROSS AREA | PCT OF BASE | TOT ADJ AREA | SUBAREA MARKET VALUE |
|---|---|---|---|---|
| BAS | 1,450 | 100 | 1,450 | 142,103 |
| BAS | 90 | 100 | 90 | 8,821 |
| FGR | 440 | 55 | 242 | 23,716 |
| FOP | 36 | 30 | 11 | 1,078 |
| TOTALS | 2,016 | | 1,793 | 175,717 |

## MARKET ADJUSTMENTS

| TYPE | MDL | EFF. AREA | TOT ADJ PTS | EFF. BASE RATE | REPL. COST NEW | AYB | EYB | ECON | FNCT | | NORM | % COND |
|---|---|---|---|---|---|---|---|---|---|---|---|---|
| 0100 | 01 | 1,793 | 123.0500 | 111.05 | 199,113 | 1998 | 1998 | 0 | 0 | 0 | 11.75 | 88.25 |

1 SINGLE FAM – 100% - 2019 Heated Area: 1540 HX Base Yr 2019

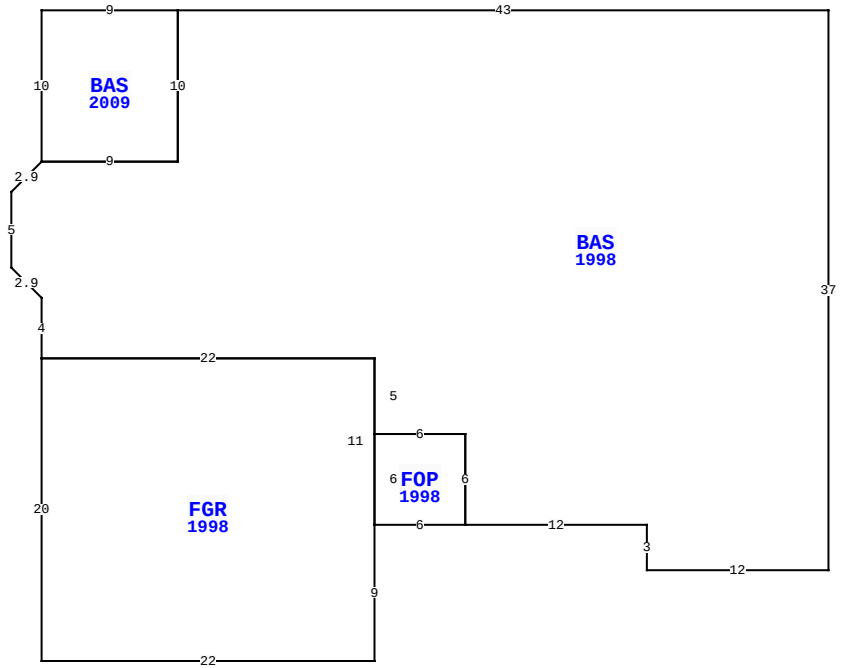


54170 JESSICA PL, CALLAHAN

| | | | |
|---|---|---|---|
| BLD DATE | | LGL DATE | |
| XF DATE | | LAND DATE | |
| INC DATE | | AG DATE | |

## VALUATION SUMMARY

| | | |
|---|---|---|
| VALUATION BY | | STANDARD |
| Tax Group: 6 | Tax Dist: | |
| BUILDING MARKET VALUE | | 175,717 |
| TOTAL MARKET OB/XF VALUE | | 9,288 |
| TOTAL LAND VALUE - MARKET | | 40,000 |
| TOTAL MARKET VALUE | | 225,005 |
| SOH/AGL Deduction | | 52,879 |
| ASSESSED VALUE | | 172,126 |
| TOTAL EXEMPTION VALUE | HX HB | 50,000 |
| BASE TAXABLE VALUE | | 122,126 |
| TOTAL JUST VALUE | | 225,005 |
| NCON VALUE | | 0 |
| INCOME VALUE | | |
| PREVIOUS YEAR MKT VALUE | | 190,327 |

| PERMIT NUM | DESCRIPTION | AMT | ISSUED |
|---|---|---|---|
| B985101 | GARAGE | 81,100 | 06/01/1998 |

## SALES DATA

| OFF RECORD Number | DATE | TYPE INST | Q / U | V / I | RSN CD | SALE PRICE |
|---|---|---|---|---|---|---|
| 2244/0678 | 12/18/2018 | WD | Q | I | 01 | 185,000 |
| GRANTOR: MATTHEW 25 INVESTMENT | | | | | | |
| GRANTEE: MCCRACKEN JONATHAN | | | | | | |
| 2203/1919 | 6/18/2018 | CT | U | I | 18 | 133,600 |
| GRANTOR: CLERK OF COURT | | | | | | |
| GRANTEE: MATTHEW 25 INVESTME | | | | | | |

## BUILDING NOTES

## BUILDING DIMENSIONS

BAS=[YR=1998] W43 BAS=[YR=2009] W9 S10 E9 N10$ S10 W9 L2 D2 S5 R2 D2 S4 FGR=[YR=1998] S20 E22 N9 FOP=[YR=1998] E6 N6 W6 S6$ N11 W22$ E22 S5 E6 S6 E12 S3 E12 N37$.

## EXTRA FEATURES

| LN | OB/XF CODE | DESCRIPTION | BLD | CAP | L | W | UNITS | UT | Adj R | ADJ UNIT PRICE | ORIG COND | YEAR ON | YEAR ACTUAL | Q | % COND | OB/XF MKT VALUE | NOTES |
|---|---|---|---|---|---|---|---|---|---|---|---|---|---|---|---|---|---|
| 1 | 0810 | CONCRETE A | 0 | 100 | 0 | 0 | 1,524.00 | SF | 6.50 | 6.50 | 100 | 1998 | 1998 | 3 | 77 | 7,628 | |
| 2 | 0504 | FP-ELECTRI | 0 | 100 | 0 | 0 | 1.00 | UT | 2,000.00 | 2,000.00 | 100 | 1998 | 1998 | 3 | 83 | 1,660 | |

## LAND DESCRIPTION

TOTAL OB/XF 9,288

| LN | USE CODE | CLS | LAND USE DESCRIPTION | CAP | RD | LOC ZONE | FRONT | DEPTH | TOT LND UTS | UNIT TYPE | DT | DPTH FACT | % COND | TOT ADJ | UNIT PRICE | ADJ UNIT PRICE | LAND VALUE | OTHER ADJUSTMENTS AND NOTES | YEAR | DENSITY | DECL | FRZ | YR | CONSRV |
|---|---|---|---|---|---|---|---|---|---|---|---|---|---|---|---|---|---|---|---|---|---|---|---|---|
| 1 | 000100 | C | SFR | 100 | 0006 | RS-1 | 0.00 | 0.00 | 1.00 | LT | | 1.00 | 1.00 | 1.00 | 40,000.00 | 40,000.00 | 40,000 | | | | | | | |

REVIEW DATE 11/19/2019 BY KBA Total Acres: 0.00 Total Land Value: 40,000 Market: 0 Agricultural: 0 Common: 40,000 PRINTED 08/02/2023 BY SYS