LOT 50
IN OR 1352/1190
DEERFIELD ACRES PB 5/299

ARMSTRONG DEBRA M
54393 JAMIE DR
CALLAHAN, FL 32011-7628

2023

37-1N-25-0340-0050-0000

NASSAU COUNTY PROPERTY

BUILDING CHARACTERISTICS

ELEMENT	CD	CONSTRUCTION
Exterior Wall	05	AVERAGE 100
Roof Structur	03	GABLE/HIP 100
Roof Cover	03	COMP SHNGL 100
Interior Wall	05	DRYWALL 100
Interior Floo	14	CARPET 80
Interior Floo	11	CLAY TILE 20
Air Condition	03	CENTRAL 100
Heating Type	04	AIR DUCTED 100
Bedrooms		3 100
Bathrooms		2 100
Frame	02	WOOD FRAME 100
Stories	1.5	1.5 100
Units		0 100
Occupancy	00	NONE 100
Quality	03	Quality Level 03

DOR CODE 0100 SINGLE FAMILY
MAP NUM | MKT AREA 08
NEIGHBORHOOD/LOC 8027.00

AREA TYPE	TOTAL GROSS AREA	PCT OF BASE	TOT ADJ AREA	SUBAREA MARKET VALUE
BAS	1,993	100	1,993	224,025
FGR	486	55	267	30,013
FOP	108	30	32	3,597
FOP	135	30	40	4,496
FUS	280	100	280	31,474
UCP	285	20	57	6,407
USP	198	30	59	6,632
TOTALS	3,485		2,728	306,644

MARKET ADJUSTMENTS

TYPE	MDL	EFF. AREA	TOT ADJ PTS	EFF. BASE RATE	REPL. COST NEW	AYB	EYB	ECON	FNCT		NORM	% COND
0900	01	2,728	102.3360	121.52	331,507	2006	2006	0	0	0	7.50	92.50

1 SNGL FAM – 100% - 2007 Heated Area: 2273 HX Base Yr 2007

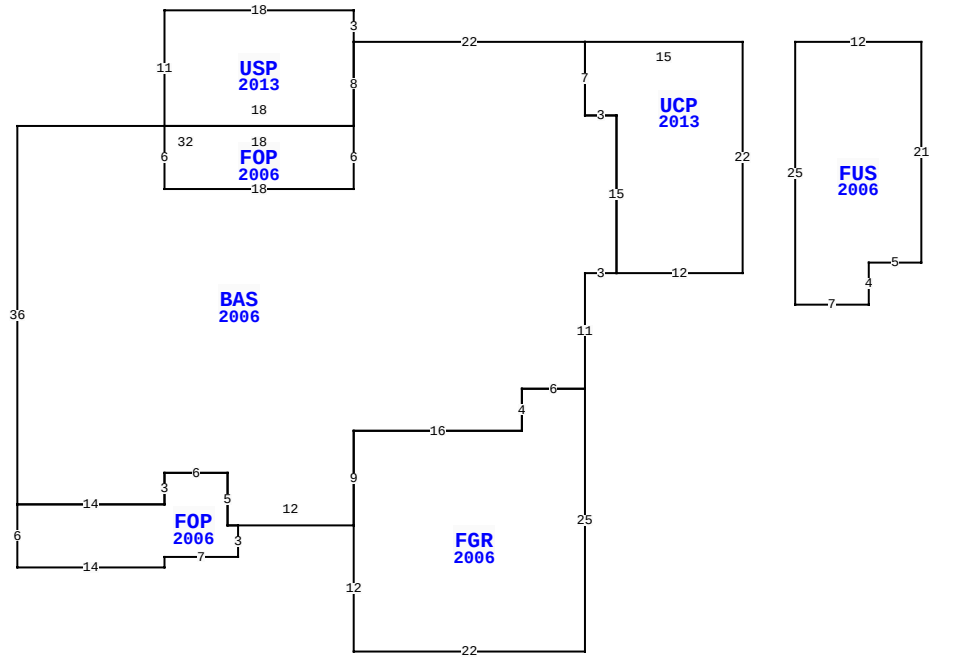

54393 JAMIE DR, CALLAHAN

BLD DATE	04/13/2007	DJ	LGL DATE	
XF DATE	04/13/2007	DJ	LAND DATE	04/13/2007 DJ
INC DATE			AG DATE	

VALUATION SUMMARY

VALUATION BY		STANDARD
Tax Group: 6	Tax Dist:	
BUILDING MARKET VALUE		306,644
TOTAL MARKET OB/XF VALUE		8,846
TOTAL LAND VALUE - MARKET		40,000
TOTAL MARKET VALUE		355,490
SOH/AGL Deduction		175,060
ASSESSED VALUE		180,430
TOTAL EXEMPTION VALUE	HX HB	50,000
BASE TAXABLE VALUE		130,430
TOTAL JUST VALUE		355,490
NCON VALUE		0
INCOME VALUE		
PREVIOUS YEAR MKT VALUE		277,834

PERMIT NUM	DESCRIPTION	AMT	ISSUED
E16208	ELEC OTHER	2,000	11/01/2005
M10622	MECH OTHER	0	11/01/2005
P10108	OTHER	0	10/01/2005
B16039	NEW CONSTR	153,897	09/01/2005
R8210	REPAIR/RRF	4,000	09/01/2005

SALES DATA

OFF RECORD Number	DATE	TYPE INST	Q U	V I	RSN CD	SALE PRICE
1352/1190	9/26/2005	WD	Q	I		178,600
GRANTOR: SCAFF JULIAN						
GRANTEE: ARMSTRONG DEBRA M						
1215/0583	3/15/2004	WD	U	V	16	30,000
GRANTOR: R A P INVESTMENTS INC						
GRANTEE: SCAFF JULIAN						

BUILDING NOTES

BUILDING DIMENSIONS

BAS=[YR=2006] W22 USP=[YR=2013] N3 W18 S11 FOP=[YR=2006] S6 E18 N6 W18$ E18 N8$ S8 W32 S36 FOP=[YR=2006] S6 E14 N1 E7 N3 W1 N5W6 S3 W14$ E14 N3 E6 S5 E12 FGR=[YR=2006] S12 E22 N25 W6 S4 W16S9$ N9 E16 N4 E6 N11 E3 UCP=[YR=2013] E12 N22 W15 S7 E3 S15$N15 W3 N7$ PTR=E20 FUS=[YR=2006] E12 S21 W5 S4 W7 N25$ W20$.

EXTRA FEATURES

LN	OB/XF CODE	DESCRIPTION	BLD	CAP	L	W	UNITS	UT	Adj R	ADJ UNIT PRICE	ORIG COND	YEAR ON	YEAR ACTUAL	Q	% COND	OB/XF MKT VALUE	NOTES
1	0812	CONCRETE C	0	100	0	0	1,996.00	SF	4.00	4.00	100	2006	2006	3	88	7,026	
2	0504	FP-ELECTRI	0	100	0	0	1.00	UT	2,000.00	2,000.00	100	2006	2006	3	91	1,820	

LAND DESCRIPTION

TOTAL OB/XF 8,846

LN	USE CODE	CLS	LAND USE DESCRIPTION	CAP	RD	LOC ZONE	FRONT	DEPTH	TOT LND UTS	UNIT TYPE	DT	DPTH FACT	% COND	TOT ADJ	UNIT PRICE	ADJ UNIT PRICE	LAND VALUE	OTHER ADJUSTMENTS AND NOTES	YEAR	DENSITY	DECL	FRZ	YR	CONSRV
1	000100	C	SFR	100		RS-1	0.00	0.00	1.00	LT		1.00	1.00	1.00	40,000.00	40,000.00	40,000							

REVIEW DATE 11/19/2019 BY KBA Total Acres: 0.00 Total Land Value: 40,000 Market: 0 Agricultural: 0 Common: 40,000 PRINTED 08/02/2023 BY SYS