LOT 29
DEERFIELD ACRES PB 5/299

SHEEHE GENA L/E/
54165 JESSICA PLACE
CALLAHAN, FL 32011

2023

37-1N-25-0340-0029-0000

NASSAU COUNTY PROPERTY

BUILDING CHARACTERISTICS

ELEMENT	CD	CONSTRUCTION
Exterior Wall	05	AVERAGE 100
Roof Structur	03	GABLE/HIP 100
Roof Cover	03	COMP SHNGL 100
Interior Wall	05	DRYWALL 100
Interior Floo	14	CARPET 90
Interior Floo	08	SHT VINYL 10
Air Condition	03	CENTRAL 100
Heating Type	04	AIR DUCTED 100
Bedrooms		3 100
Bathrooms		2 100
Frame	02	WOOD FRAME 100
Stories	1.	1. 100
Units		0 100
Occupancy	00	NONE 100
Quality	06	Quality Level 06
DOR CODE	0100	SINGLE FAMILY
MAP NUM		MKT AREA 08
NEIGHBORHOOD/LOC	8027.00	

AREA TYPE	TOTAL GROSS AREA	PCT OF BASE	TOT ADJ AREA	SUBAREA MARKET VALUE
BAS	1,382	100	1,382	136,412
FGR	410	55	226	22,307
FOP	82	30	25	2,467
FOP	129	30	39	3,849
PTO	152	5	8	790
UCP	380	20	76	7,502
TOTALS	2,535		1,756	173,327

MARKET ADJUSTMENTS

TYPE	MDL	EFF. AREA	TOT ADJ PTS	EFF. BASE RATE	REPL. COST NEW	AYB	EYB	ECON	FNCT		NORM	% COND
0100	01	1,756	125.3500	113.13	198,656	1996	1996	0	0	0	12.75	87.25

1 SINGLE FAM – 100% - 2009 Heated Area: 1382 HX Base Yr 2009

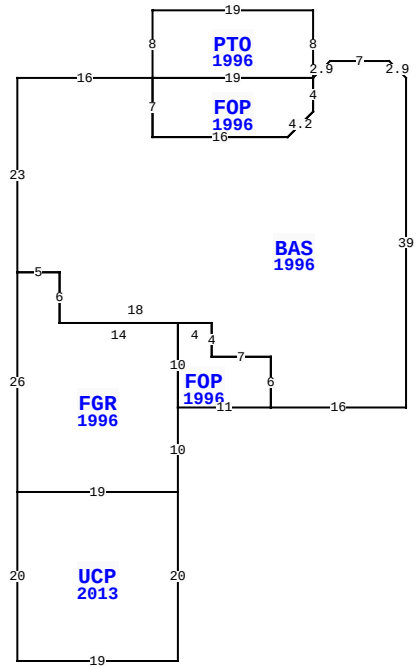

54165 JESSICA PL, CALLAHAN

BLD DATE		LGL DATE	
XF DATE		LAND DATE	
INC DATE		AG DATE	

VALUATION SUMMARY

VALUATION BY		STANDARD
Tax Group: 6	Tax Dist:	
BUILDING MARKET VALUE		173,327
TOTAL MARKET OB/XF VALUE		3,578
TOTAL LAND VALUE - MARKET		40,000
TOTAL MARKET VALUE		216,905
SOH/AGL Deduction		98,713
ASSESSED VALUE		118,192
TOTAL EXEMPTION VALUE	HX HB WX	55,000
BASE TAXABLE VALUE		63,192
TOTAL JUST VALUE		216,905
NCON VALUE		0
INCOME VALUE		
PREVIOUS YEAR MKT VALUE		185,460

PERMIT NUM	DESCRIPTION	AMT	ISSUED
B22844	XFOB	8,035	09/01/2009
B952353	NEW CONSTR	78,000	12/01/1995

SALES DATA

OFF RECORD Number	DATE	TYPE INST	Q / U	V / I	RSN CD	SALE PRICE
2302/1522	9/03/2019	WD	U	I	11	100
GRANTOR: SHEEHE GENA						
GRANTEE: HARRIS KELLY E & KI						
1576/1152	7/14/2008	WD	Q	I		165,000
GRANTOR: LUMSDEN ROBIN H						
GRANTEE: SHEEHE RICHARD & GE						

BUILDING NOTES

BUILDING DIMENSIONS

BAS=[YR=1996] U2 L2 W7 D2 L2 PTO=[YR=1996] N8 W19 S8 FOP=[YR=1996] S7 E16 U3 R3 N4 W19$ E19$ S4 L3 D3 W16 N7 W16 S23 FGR=[YR=1996] S26 UCP=[YR=2013] S20 E19 N20 W19$ E19 N10 FOP=[YR=1996] E11 N6 W7 N4 W4 S10$ N10 W14 N6 W5$ E5 S6 E18 S4 E7S6 E16 N39$.

EXTRA FEATURES

LN	OB/XF CODE	DESCRIPTION	BLD	CAP	L	W	UNITS	UT	Adj R	ADJ UNIT PRICE	ORIG COND	YEAR ON	YEAR ACTUAL	Q	% COND	OB/XF MKT VALUE	NOTES
1	0500	FP-PRE FAB	0	100	0	0	1.00	UT	3,500.00	3,500.00	100	1996	1996	3	80	2,800	
2	0810	CONCRETE A	0	100	13	4	52.00	SF	6.50	6.50	100	1996	1996	3	73	247	
3	0810	CONCRETE A	0	100	28	4	112.00	SF	6.50	6.50	100	1996	1996	3	73	531	

LAND DESCRIPTION

TOTAL OB/XF 3,578

LN	USE CODE	CLS	LAND USE DESCRIPTION	CAP	RD	LOC ZONE	FRONT	DEPTH	TOT LND UTS	UNIT TYPE	DT	DPTH FACT	% COND	TOT ADJ	UNIT PRICE	ADJ UNIT PRICE	LAND VALUE	OTHER ADJUSTMENTS AND NOTES	YEAR	DENSITY	DECL	FRZ	YR	CONSRV
1	000100	C	SFR	100	0006	RS-1	0.00	0.00	1.00	LT		1.00	1.00	1.00	40,000.00	40,000.00	40,000							

REVIEW DATE 11/15/2019 BY KBA Total Acres: 0.00 Total Land Value: 40,000 Market: 0 Agricultural: 0 Common: 40,000 PRINTED 08/02/2023 BY SYS