IN OR 776 PG 1496

LAWSON ROBERT J & PEGGY L
54290 ROY BOOTH ROAD
CALLAHAN, FL 32011

**2023**

**37-1N-25-0000-0010-0130**

## BUILDING CHARACTERISTICS

| ELEMENT | CD | CONSTRUCTION |
|---|---|---|
| Exterior Wall | 20 | FACE BRICK 90 |
| Exterior Wall | 21 | STONE 10 |
| Roof Structur | 03 | GABLE/HIP 100 |
| Roof Cover | 03 | COMP SHNGL 100 |
| Interior Wall | 05 | DRYWALL 100 |
| Interior Floo | 14 | CARPET 60 |
| Interior Floo | 11 | CLAY TILE 40 |
| Air Condition | 03 | CENTRAL 100 |
| Heating Type | 04 | AIR DUCTED 100 |
| Bedrooms | | 3 100 |
| Bathrooms | | 1 100 |
| Frame | 02 | WOOD FRAME 100 |
| Stories | 1. | 1. 100 |
| Units | | 0 100 |
| BUD8 Adjustme | 06 | DIST 1D 100 |
| Occupancy | 00 | NONE 100 |
| Quality | 01 | Quality Level 01 |

| | | | |
|---|---|---|---|
| DOR CODE | 0100 | SINGLE FAMILY | |
| MAP NUM | | MKT AREA | 08 |
| NEIGHBORHOOD/LOC | 8026.00 | | |

| AREA TYPE | TOTAL GROSS AREA | PCT OF BASE | TOT ADJ AREA | SUBAREA MARKET VALUE |
|---|---|---|---|---|
| BAS | 2,589 | 100 | 2,589 | 208,397 |
| FGR | 648 | 55 | 356 | 28,656 |
| FOP | 70 | 30 | 21 | 1,691 |
| FOP | 124 | 30 | 37 | 2,978 |
| USP | 248 | 30 | 74 | 5,957 |
| TOTALS | 3,679 | | 3,077 | 247,678 |

## MARKET ADJUSTMENTS

| TYPE | MDL | EFF. AREA | TOT ADJ PTS | EFF. BASE RATE | REPL. COST NEW | AYB | EYB | ECON | FNCT | | NORM | % COND |
|---|---|---|---|---|---|---|---|---|---|---|---|---|
| 0900 | 01 | 3,077 | 87.8508 | 104.32 | 320,993 | 1983 | 1990 | 0 | 0 | 0 | 22.84 | 77.16 |

1 SNGL FAM – 100% - 1997 Heated Area: 2589 HX Base Yr 1997

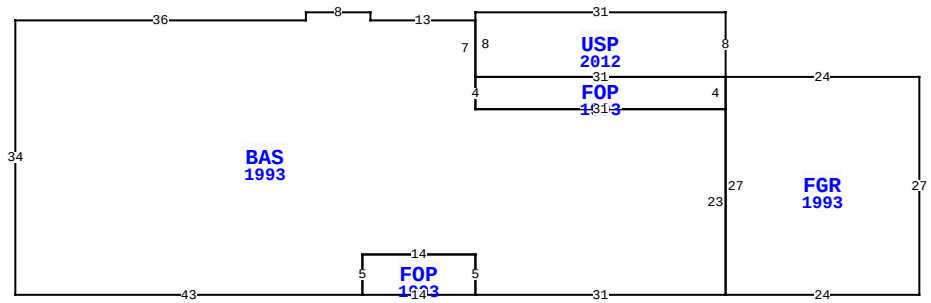


54290 ROY BOOTH RD, CALLAHAN

| | | | |
|---|---|---|---|
| BLD DATE | | LGL DATE | |
| XF DATE | | LAND DATE | |
| INC DATE | | AG DATE | |

## NASSAU COUNTY PROPERTY

PAGE 1 of 1 6

### VALUATION SUMMARY

| | | |
|---|---|---|
| VALUATION BY | | STANDARD |
| Tax Group: 6 | Tax Dist: | |
| BUILDING MARKET VALUE | | 247,678 |
| TOTAL MARKET OB/XF VALUE | | 10,182 |
| TOTAL LAND VALUE - MARKET | | 73,260 |
| TOTAL MARKET VALUE | | 331,120 |
| SOH/AGL Deduction | | 163,697 |
| ASSESSED VALUE | | 167,423 |
| TOTAL EXEMPTION VALUE | HX HB | 50,000 |
| BASE TAXABLE VALUE | | 117,423 |
| TOTAL JUST VALUE | | 331,120 |
| NCON VALUE | | 0 |
| INCOME VALUE | | |
| PREVIOUS YEAR MKT VALUE | | 260,804 |

| PERMIT NUM | DESCRIPTION | AMT | ISSUED |
|---|---|---|---|
| 22006040 | REPAIR/RRF | 18,300 | 04/19/2022 |
| 1252 | NEW CONSTR | 42,000 | 01/01/1982 |

## SALES DATA

| OFF RECORD Number | DATE | TYPE INST | Q / U | V / I | RSN CD | SALE PRICE |
|---|---|---|---|---|---|---|
| 0776/1496 | 11/13/1996 | WD | U | I | 07 | 100 |
| GRANTOR: PENNEWELL STANLEY & V | | | | | | |
| GRANTEE: LAWSON ROBT & PEGGY | | | | | | |
| 0765/0692 | 7/17/1996 | WD | Q | I | | 125,000 |
| GRANTOR: PENNEWELL STANLEY L & | | | | | | |
| GRANTEE: LAWON ROBERT & PEGG | | | | | | |

## BUILDING NOTES

## EXTRA FEATURES

| LN | OB/XF CODE | DESCRIPTION | BLD | CAP | L | W | UNITS | UT | Adj R | ADJ UNIT PRICE | ORIG COND | YEAR ON | YEAR ACTUAL | Q | % COND | OB/XF MKT VALUE | NOTES |
|---|---|---|---|---|---|---|---|---|---|---|---|---|---|---|---|---|---|
| 1 | 0500 | FP-PRE FAB | 0 | 100 | 0 | 0 | 1.00 | UT | 3,500.00 | 3,500.00 | 100 | 1983 | 1983 | 3 | 56 | 1,960 | |
| 2 | 0812 | CONCRETE C | 0 | 100 | 0 | 0 | 1,837.00 | SF | 4.00 | 4.00 | 100 | 1992 | 1992 | 3 | 66 | 4,850 | |
| 4 | 0940 | SHEDS/PORT | 0 | 100 | 12 | 20 | 240.00 | SF | 30.00 | 30.00 | 100 | 2005 | 2005 | 3 | 27 | 1,944 | |
| 5 | 0940 | SHEDS/PORT | 0 | 100 | 10 | 18 | 180.00 | SF | 30.00 | 30.00 | 100 | 2000 | 2000 | 3 | 20 | 1,080 | |
| 6 | 0681 | POLE SHED | 0 | 100 | 8 | 10 | 80.00 | SF | 15.00 | 15.00 | 100 | 2000 | 2000 | 3 | 29 | 348 | |

## BUILDING DIMENSIONS

BAS=[YR=1993;ORIG=-55,0] N7 W13 N1 W8 S1 W36 S34 E43 N5 E14 S5 E31 N23 W31 N4 $
FGR=[YR=1993;ORIG=0,0] W24 S27 E24 N27 $
USP=[YR=2012;ORIG=-24,0] N8 W31 S8 E31 $
FOP=[YR=1993;ORIG=-24,0] W31 S4 E31 N4 $
FOP=[YR=1993;ORIG=-69,27] E14 N5 W14 S5 $
.

## LAND DESCRIPTION

TOTAL OB/XF 10,182

| LN | USE CODE | CLS | LAND USE DESCRIPTION | CAP | RD | LOC ZONE | FRONT | DEPTH | TOT LND UTS | UNIT TYPE | DT | DPTH FACT | % COND | TOT ADJ | UNIT PRICE | ADJ UNIT PRICE | LAND VALUE | OTHER ADJUSTMENTS AND NOTES | YEAR | DENSITY | DECL | FRZ | YR | CONSRV |
|---|---|---|---|---|---|---|---|---|---|---|---|---|---|---|---|---|---|---|---|---|---|---|---|---|
| 1 | 000115 | C | SFR ACRES | 100 | 0006 | OR | 0.00 | 0.00 | 4.07 | AC | | 1.00 | 1.00 | 1.00 | 18,000.00 | 18,000.00 | 73,260 | | | | | | | |

REVIEW DATE 01/06/2023 BY KWA Total Acres: 4.07 Total Land Value: 73,260 Market: 0 Agricultural: 0 Common: 73,260 PRINTED 08/02/2023 BY SYS